INSTALLATION AND OWNER'S MANUAL

MODEL MT

Medium Duty Drawbar Operator

UL 325 and UL 991 Listed

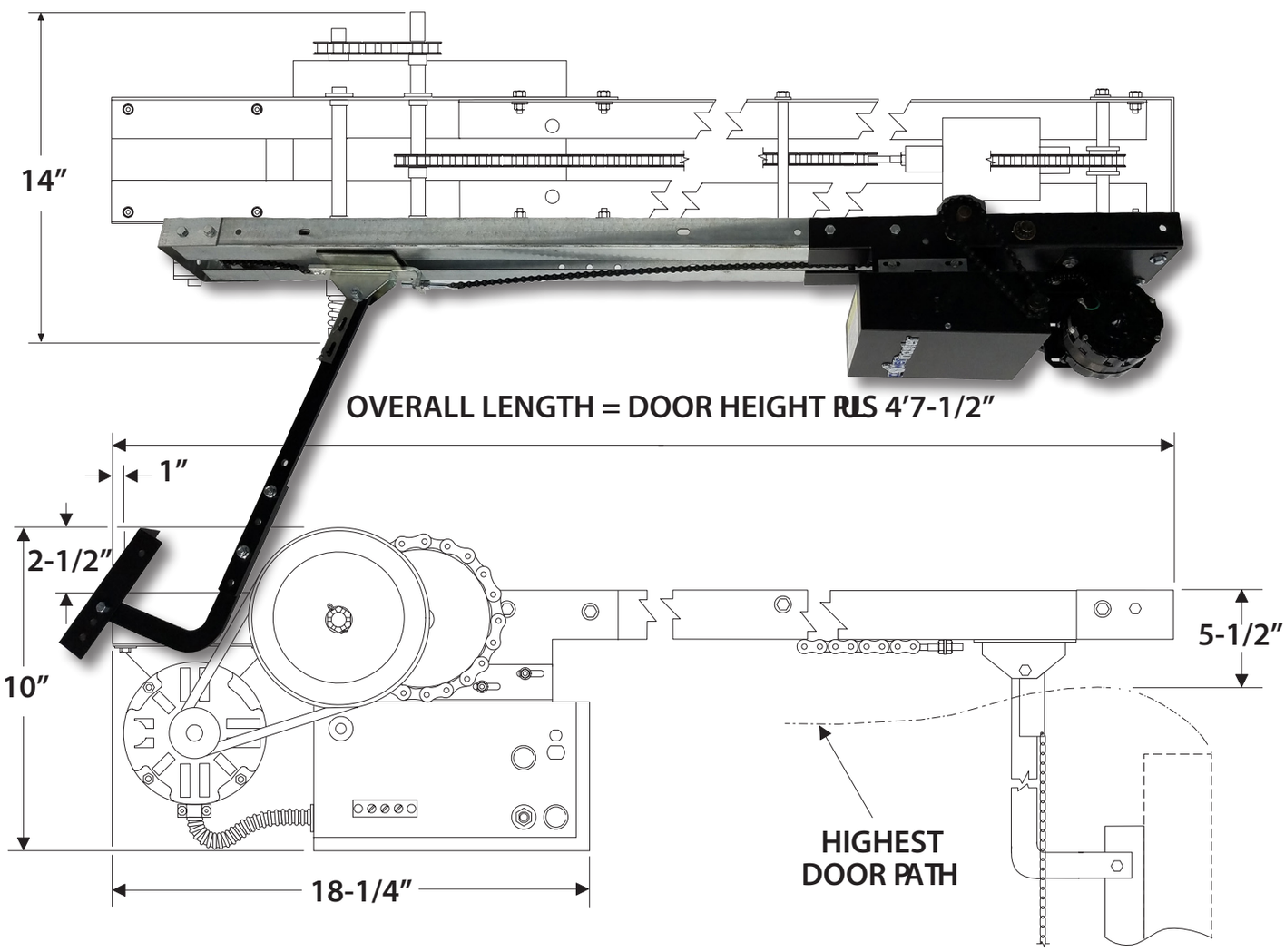

Serial #:	
Date Installed:	
Your Dealer:	

READ THIS MANUAL CAREFULLY BEFORE INSTALLATION OR USE. SAVE THESE INSTRUCTIONS.

As of date of manufacture, meets all ANSI/UL 325 Safety Requirements for Vehicular door operators.

Table of Contents
Model MT Drawbar Operator

Product Features 3

Preparation 4

Component Identification 5

Important Installation Notes (Things to do Before & During Installation) 6

Installation Instructions 7-14

- Rail/Track Assembly 7
- Operator Assembly 8-9
- Mounting the Operator 10-13
- Setting the Limit Switches 14

Electrical Wiring Instructions 15

Accepted Safety Equipment 16

Important Safety Notes for Owner 17

Operation and Adjustment Instructions 18-19

- Clutch Adjustment 18
- Testing 19

Maintenance 20

Trouble Shooting Chart 21

Warranty 23

READ THESE STATEMENTS CAREFULLY AND FOLLOW THE INSTRUCTIONS CLOSELY

The Warning and Caution boxes throughout this manual are there to protect you and your equipment. Pay close attention to these boxes as you follow the manual.

WARNING	CAUTION	WARNING	CAUTION
Indicates a MECHANICAL hazard of injury or death. Gives instructions to avoid the hazard.	Indicates a MECHANICAL hazard of damage to your operator or equipment. Gives instructions to avoid the hazard.	Indicates an ELECTRICAL hazard of injury or death. Gives instructions to avoid the hazard.	Indicates an ELECTRICAL hazard of damage to your operator or equipment. Gives instructions to avoid the hazard.

PRODUCT FEATURES

The purpose of this booklet is to provide assembly, installation, and operation information concerning PowerMaster Model MT Drawbar Commercial Vehicular Garage Door Operators and related Accessory Products.

NOTE: IT IS IMPORTANT THAT THIS INSTRUCTION MANUAL BE READ AND UNDERSTOOD COMPLETELY BEFORE INSTALLATION OR OPERATION IS ATTEMPTED. IT IS INTENDED THAT THE INSTALLATION OF THIS UNIT WILL BE DONE ONLY BY PERSONS TRAINED AND QUALIFIED IN THE INSTALLATION, ADJUSTMENT, AND SERVICE OF COMMERCIAL OVERHEAD DOORS AND DOOR OPERATORS, AND BY QUALIFIED ELECTRICIANS.

The important safeguards and instructions in this manual cannot cover all possible conditions and situations which may occur during its use. It must be understood that common sense and caution be exercised by the person(s) installing, maintaining, and operating the equipment described herein.

Do not use this equipment for any purpose other than its intended use: the operation of an overhead commercial vehicular garage door.

STANDARD FEATURES

Limit Switches: Rotary limit switches, easily adjusted over a wide range. The motor may be removed without affecting the limit switch adjustments.

Manual Release: Permits manual operation of the door in the event of a power failure. The Model MT operator is equipped with a door arm disconnect to aid in manual operation. Use of this feature will not affect the limit switch adjustment.

Control Circuit: Standard 3-button open, close, and stop. 24 Volts AC.

Connections for Auxiliary Entrapment Protection Devices: Use with reversing door edge components or a photo-electric beam device across the opening.

Constant Pressure to Close: Standard operation.

Momentary Contact To Close: Feature can be activated by simply moving a wire on the terminal strip.

MODEL MT OPERATOR APPLICATIONS

Drawbar operators are intended for commercial and industrial use on sectional overhead doors which use horizontal track with normal radius. A drawbar operator is not suitable for doors with high lift or vertical lift doors. The installation requires a minimum clearance of 8 inches above the highest point of the door at any point in its travel. Please refer to **Figure 10** for back room requirements.

A drawbar operator - when properly installed - will effectively lock the door in the closed position.

Model MT Drawbar operators are used in the following applications:

- Medium Duty, Indoor Commercial installations only
- Use with reversing door edge or photoelectric device - REQUIRED where the 3-button station is out of sight of the door, or any other automatic, remote, or manual control is used to activate the door.

OPTIONAL FEATURES:

Digital Radio Controls: Open, Close and Stop operation. Radio units are available to control up to 27 doors from one transmitter.

Digital Timer to Close: Adjustable from 0 to 5.

Keyless Entry System: Connection terminals provided for hard wired or wireless keyless entry systems.

PREPARATION

WARNING

ELECTRIC DOOR OPERATORS ARE DESIGNED FOR DOORS IN GOOD WORKING CONDITION: PROPERLY OPERATING, PROPERLY COUNTERBALANCED, AND PROPERLY ADJUSTED IN ACCORDANCE WITH THE DOOR MANUFACTURER'S INSTALLATION INSTRUCTIONS.

Before starting the installation of the operator, the door must be in good working condition, properly operating, and be properly counterbalanced. Inspect the door and track for loose or missing hardware. Test the door manually for balance and ease of operation. Lubricate door hinges and rollers. If necessary, employ a qualified technician to adjust the springs for proper counterbalance of the door.

Before removing the operator powerhead from the shipping carton, inspect the nameplate on the cover of the operator control box to verify that it is the correct model for the intended application, and that the voltage and phase are in accordance with electrical power provided at the job site. The rails are shipped separately from the powerhead.

WARNING

ROPE OFF THE AREA TO KEEP PERSONNEL AND VEHICLES CLEAR OF THE DOOR AND FLOOR SPACE IN THE VICINITY OF THE OPERATOR DURING THE INSTALLATION.

WARNING

SPRINGS ARE SUBJECT TO VERY HIGH FORCES AT ALL TIMES. ADJUSTMENTS ARE TO BE MADE BY A QUALIFIED PROFESSIONAL DOOR INSTALLER ONLY.

WARNING

REMOVE OR DISABLE ANY LOCKING DEVICES FROM DOOR. REMOVE ALL ROPES.

COMPONENT IDENTIFICATION

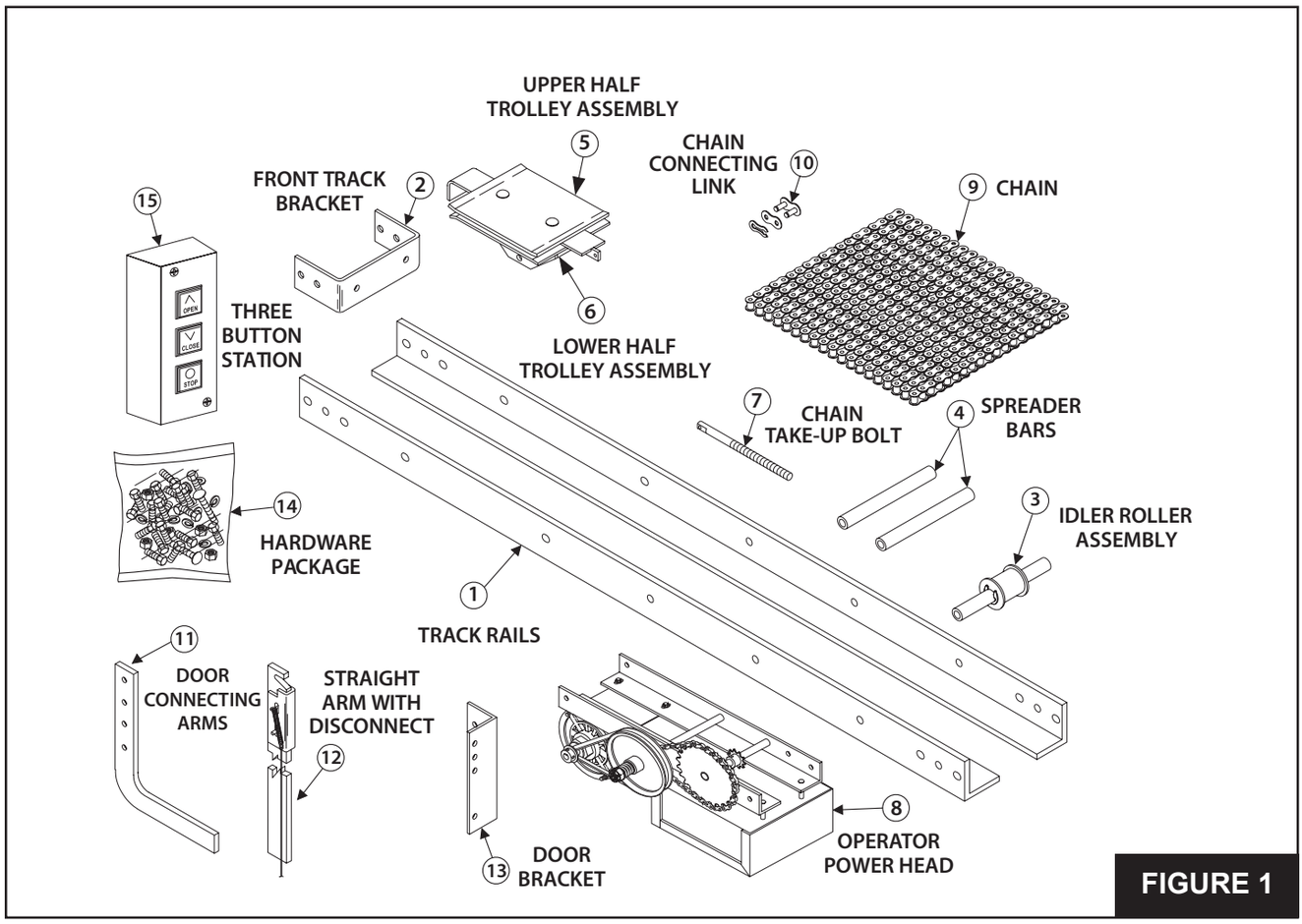

FIGURE 1

COMPONENT IDENTIFICATION LISTING

Item#	Description	Quantity
1	Track Rails	2
2	Front Track Bracket	1
3	Idler Roller Assembly	1
4	Track Spreader Bars	2
5	Upper Half of Trolley Assembly	1
6	Lower Half of Trolley Assembly	1
7	Chain Take-Up Bolt	1
8	Operator Power Head	1
9	Drive Chain	1
10	Chain Connecting Link	1
11	Curved Door Arm	1
12	Straight Arm w/Disconnect	1
13	Door Bracket	1
14	Hardware Package	1
15	3 Button Station	1

IMPORTANT INSTALLATION NOTES

WARNING	**TO REDUCE THE RISK OF SEVERE INJURY OR DEATH, READ & FOLLOW ALL INSTALLATION INSTRUCTIONS!**

- Install only on a properly balanced garage door. An improperly balanced door could cause severe injury. Have a qualified service person make repairs to cables, spring assemblies, and other hardware before installing the opener.
- Remove all ropes, and remove or make inoperative all locks that are connected to the garage door before installing the opener (unless mechanically and/or electrically interlocked to the power unit).
- Lightweight doors (fiberglass, aluminum etc.) must be reinforced to avoid door damage. Check the door manufacturer's instruction manual for a bracing procedure or the availability of a Reinforcement Kit.
- PowerMaster Model T Drawbar operators are Commercial Vehicular Door Operators, and as such, are NOT recommended for pedestrian traffic. In installations where it is known that the pedestrians will be nearby, ensure a pedestrian door is available for entrance and exit to the building. In addition, YOU MUST install an auxiliary entrapment protection device (reversing door edge or photoelectric beam device) as part of the compete operator system.
- Connect an auxiliary entrapment protection device (reversing edge or photoelectric device across the door opening). A device of this type is STRONGLY ADVISED FOR ALL commercial operator installations. An auxiliary entrapment protection device is REQUIRED when the three button control station is out of sight of the door or any other automatic or manual control is used.
- Install the opener **AT LEAST 8 feet** or more above the floor.
- Do not connect the opener to the source of power until instructed to do so.
- Locate the control station:
  a. Within sight of the door;
  b. At a minimum height of 5 feet above the floor so small children cannot reach it; ***and***
  c. Away from the door, so the user is prevented from coming in contact with the door while operating the controls.
- Do not overtighten the clutch adjustment to compensate for a poorly working door.
- Securely attach any WARNING signs or placards to either the door or above the control station as directed.
- After installing the opener, all safety features must be tested for proper operation. (See ***TESTING*** section)

WARNING

SPRINGS, PULLEYS, CABLES AND MOUNTING HARDWARE USED TO BALANCE YOUR GARAGE DOOR ARE UNDER EXTREME TENSION AT ALL TIMES AND CAN CAUSE SEVERE INJURY OR DEATH IF DISTURBED. DO NOT ATTEMPT ADJUSTMENT.

RAIL/TRACK ASSEMBLY

TRACK ASSEMBLY

Before starting assembly of the operator track, check for proper length. The tracks supplied may be longer than required for the door height. The tracks should be 3-1/2 feet longer than the door height. If tracks supplied are longer than the door height plus 3-1/2 feet, it will be necessary to trim the rails in 2-foot increments from the power head mounting end.

CAUTION: WHEN NECESSARY TO CUT TRACK, ENSURE THE ENDS ARE LINED UP AS SHOWN IN FIGURE 2.

1. Lay Track Angles [#1] on work surface as shown in **Figure 2**.
2. Install Front Track Bracket [#2] and Front Idler Roller Assembly [#3] to one end of track using 3/8 x 3/4 long hex head bolts and 3/8 lock washers, as shown in **Figure 2.**
3. Install two track spreader bars [#4], evenly spaced over length of track using 3/8 x 3/4 long hex head bolts and 3/8 lock washers, as shown in **Figure 2**.

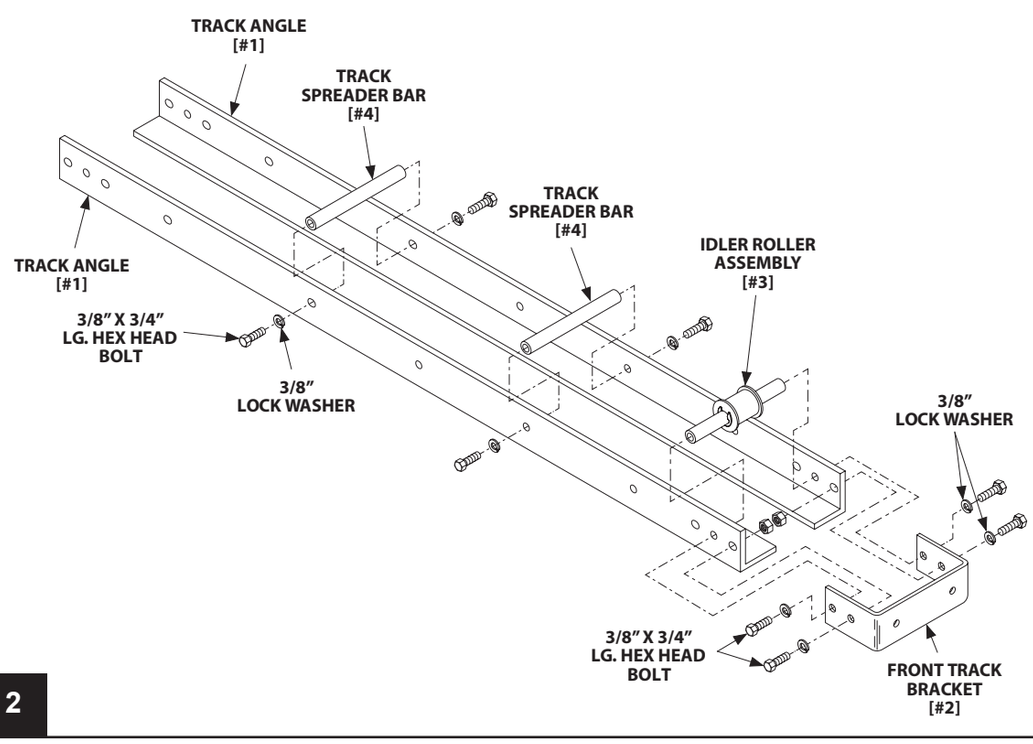

FIGURE 2

TROLLEY ASSEMBLY

1. Assemble Upper Half of Trolley [#5] to Lower Half of Trolley [#6] using two 5/16 x 1-1/4 carriage bolts, two 5/16 Lock Washers and two 5/16 Hex Nuts as shown in **Figure 3**.
2. Install 3/8 Chain Take-up Bolt [#7] into Trolley Assembly using one 3/8 Lock Washer and two 3/8 Hex Nuts as shown in **Figure 3**. DO NOT TIGHTEN NUTS!
3. Install 3/8 x 2" Long Hex Head Bolt through ears on Lower Half of Trolley [#6] and secure in position with 3/8 Lock Washer and 3/8 Hex Nut.

OPERATOR ASSEMBLY

1. Install Trolley Slide Assembly on Track Assembly with Chain Take-up Bolt [#7] pointing towards end of track where Power Head [#8] will be mounted as shown in **Figure 4**.

2. Mount Power Head to Track Assembly using four 3/8 x 3/4 Long Hex Head Bolts, four 3/8 Lock Washers and four 3/8 Hex Nuts, as shown in **Figure 4**.

3. Turn operator assembly over and back off Chain Adjustment Nut to the end of the threads on Chain Take-up Bolt [#7]. See **Figure 5**.

4. Lay out Drive Chain [#9] next to operator assembly work surface.

5. Thread one end of the Operator Drive Chain around Operator Drive Sprocket and connect to the Chain Take-up Bolt [#7] on Trolley Assembly with a Chain Connecting Link. See **Figure 5** and **Figure 6**.

6. Thread the other end of the Drive Chain [#9] around the Idler Roller Assembly [#3]. See **Figure 6**.

7. Pull Drive Chain [#9] tight up to Trolley Traveler Assembly. Mark the link that lines up with Drive Tab on Traveler Assembly and cut Drive Chain to length.

8. Attach cut end of Drive Chain [#9] to Drive Tab on Trolley Traveler Assembly with a Chain Connecting Link. See **Figure 5**.

9. Adjust chain tension using Chain Adjusting Nut to remove excess slack. See **Figure 5**.

10. Lock in adjustment using Lock Washer and Lock Nut on Chain Take-up Bolt. See **Figure 5**.

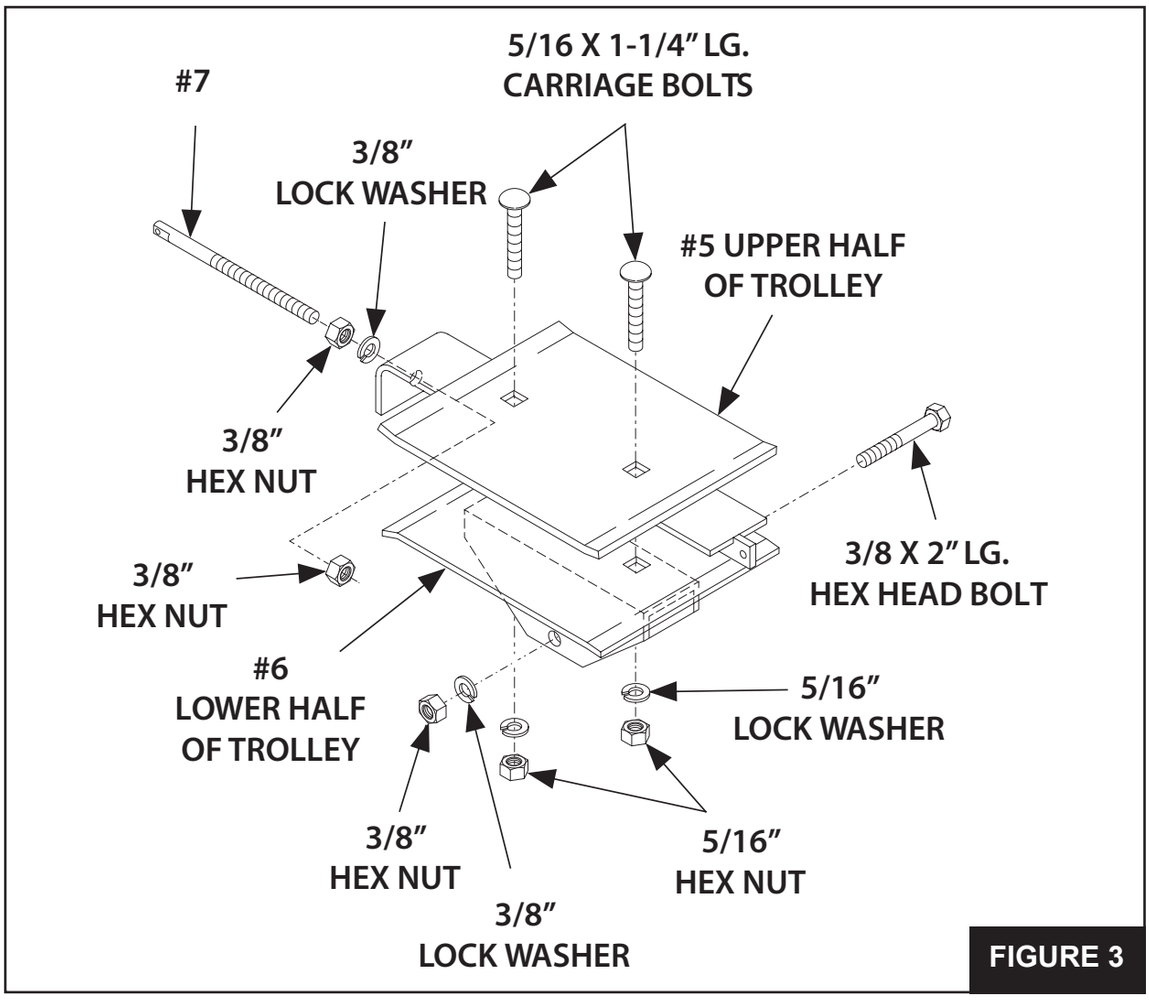

FIGURE 3

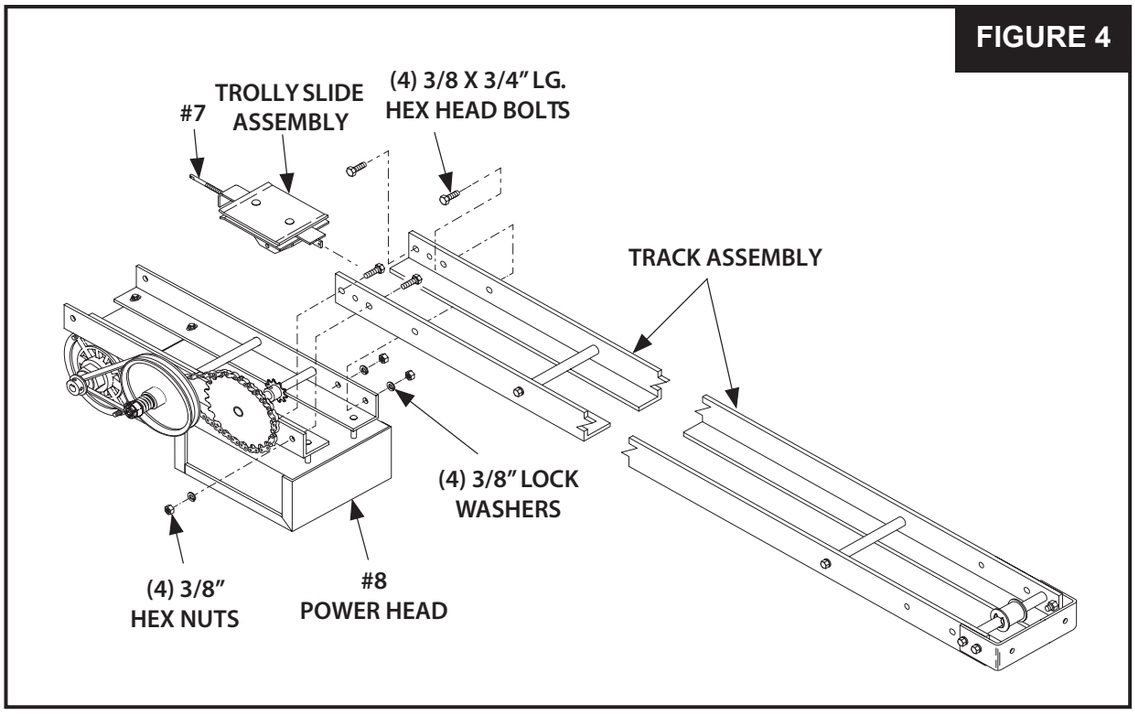

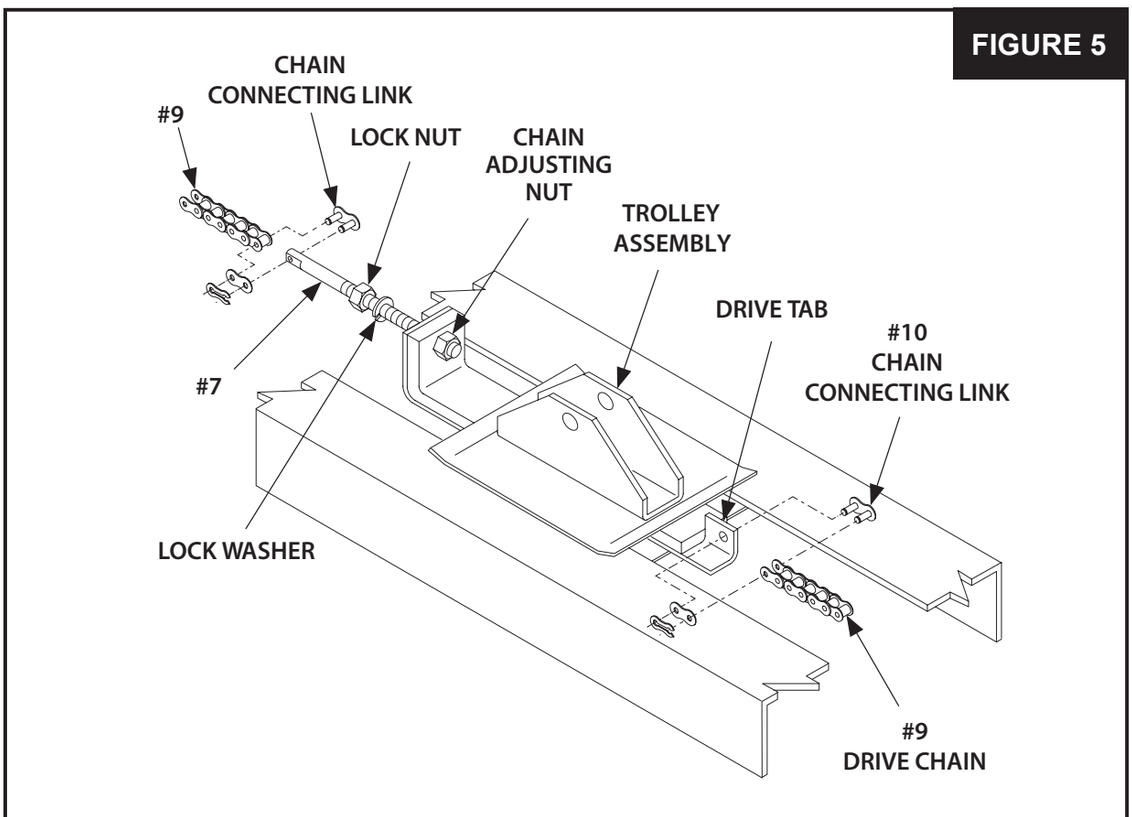

Unit is shown in the inverted position to facilitate assembly of trolley track and traveler. When properly installed, the power head and trolley assembly should face the floor. *Note:* *Install drive chain so trolley assembly is located near front idler as shown.*

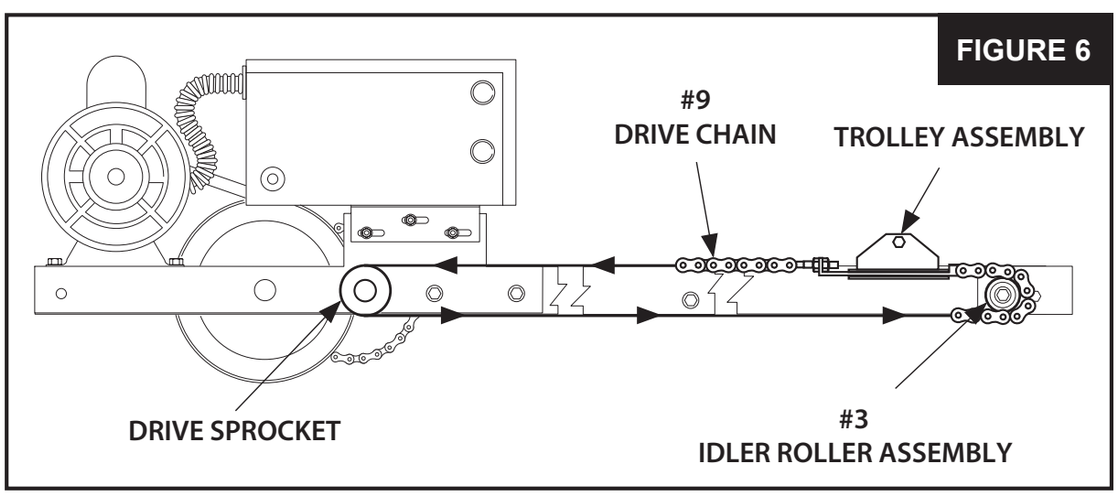

WARNING	TO AVOID DAMAGE TO THE DOOR AND OPERATOR, ENSURE ALL LOCKS ARE DISABLED. USE AN INTERLOCK SWITCH IF A LOCK IS REQUIRED TO RETAIN FUNCTIONALITY.

MOUNTING THE OPERATOR

1. Locate the center of the door and mark a line on the wall directly above the door. Extend this line approximately 20" up the wall (See **Figure 7**).
2. Slowly raise the garage door and observe the action of the top section. When the top section reaches the highest point (high arc), use a level and project a line from this point to the center of the door (See **Figure 8**).
3. Using the projected lines for location, mount a suitable wood block or angle iron – depending on the structure of the building – to the wall above the door opening as shown in **Figure 7**. Ensure the block or angle iron used will provide a sound and secure mounting pad for the operator track front mounting bracket (See Warning below). Drill the required holes for mounting the operator track front mounting bracket as shown in **Figure 9**.

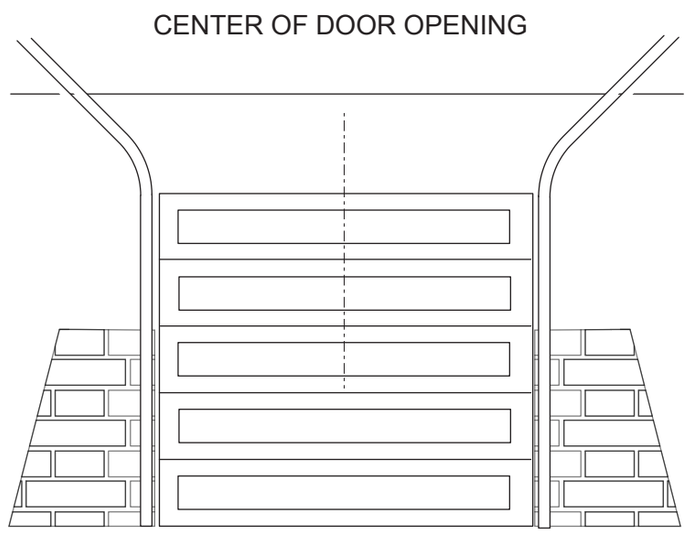

FIGURE 7

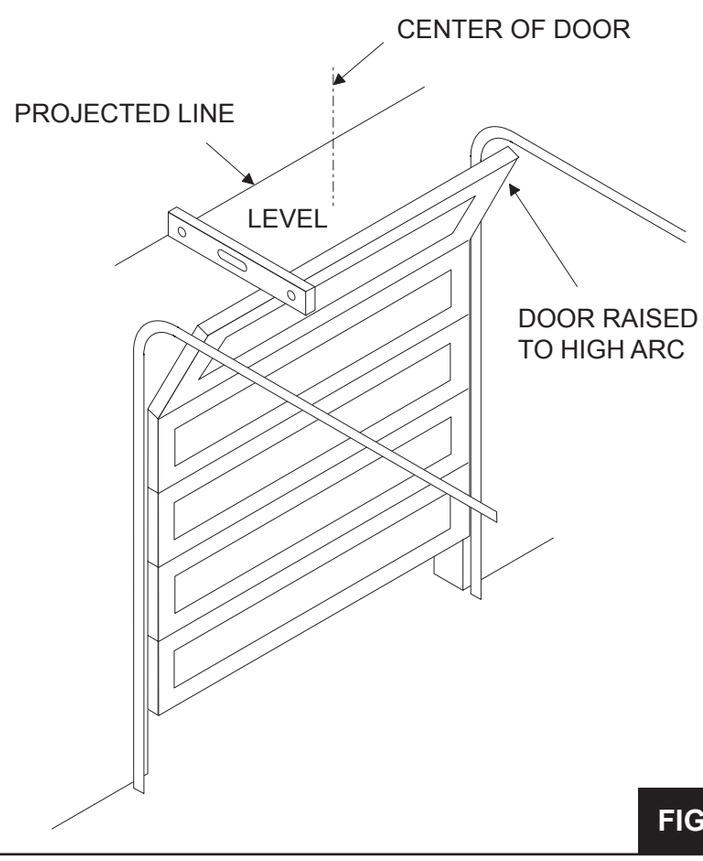

FIGURE 8

WARNING

THE FRONT MOUNTING SURFACE MUST BE SOUND AND SECURE. IF NECESSARY, PROVIDE REINFORCEMENT IN THIS AREA BEFORE MOUNTING THE OPERATOR RAIL FRONT MOUNTING BRACKET.

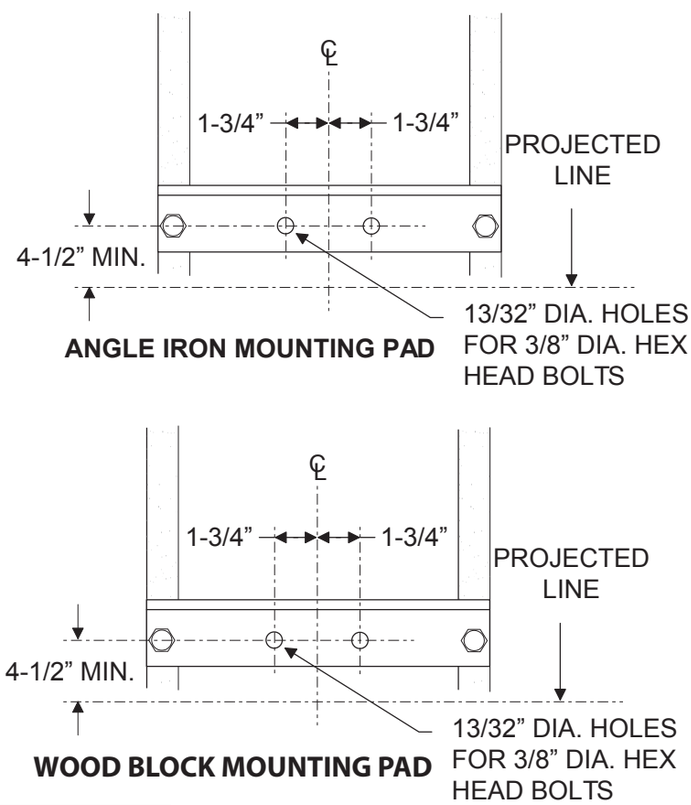

FIGURE 9

CAUTION

TO AVOID DAMAGE TO THE DOOR TOP SECTION, REINFORCE THE CENTER STILE WITH A VERTICAL BRACE. ADDITIONAL BRACING REINFORCEMENT MAY BE REQUIRED WHEN THE DOOR IS CONTROLLED BY AN AUTOMATIC DOOR OPERATOR. CONSULT THE DOOR MANUFACTURER FOR INSTRUCTIONS.

BEFORE PROCEEDING, RE-CHECK ALL BOLTS, NUTS AND LAG SCREWS AND ENSURE THEY ARE TIGHT!

4. Raise operator and Track Assembly into mounting position, as shown in **Figure 10**. Temporarily support by suspending from ceiling with suitable ropes or chains, or supporting from floor to operator.

5. Secure track Front Bracket to pre-drilled wood or angle iron mounting pad as shown in Figure 10. Ensure that Operator Track Assembly is level, and secure Power Head to ceiling structure as shown.

   Note: Figure 10 depicts a typical method of hanging the power head of the operator from the ceiling. Each installation will vary due to the difference in building structures. Side braces should always be used to further support the Power Head.

6. Fully close the door and move the trolley to within 2 inches of the Front Idler Roller. Using **Figure 11** as a guide, connect the release arm (Item #12) to the trolley. Connect the Door Curved Arm (#11) to the door release arm with two 3/8 x 1-1/4" bolts, lock washers and nuts.

7. Refer to **Figure 12**. Attach the Door Bracket (#13) to the curved arm using a 3/8 x 1-1/4" bolt and two 3/8 hex nuts. Install the nuts until snug and then back off, leaving 1/16" clearance to allow the arm to pivot on the bolt freely. Secure adjustment by locking nuts against each other. Position the Door Bracket to the scribed center line on the door. Attach to door with two 5/16 x 2-1/2 long carriage bolts, lock washers and nuts.

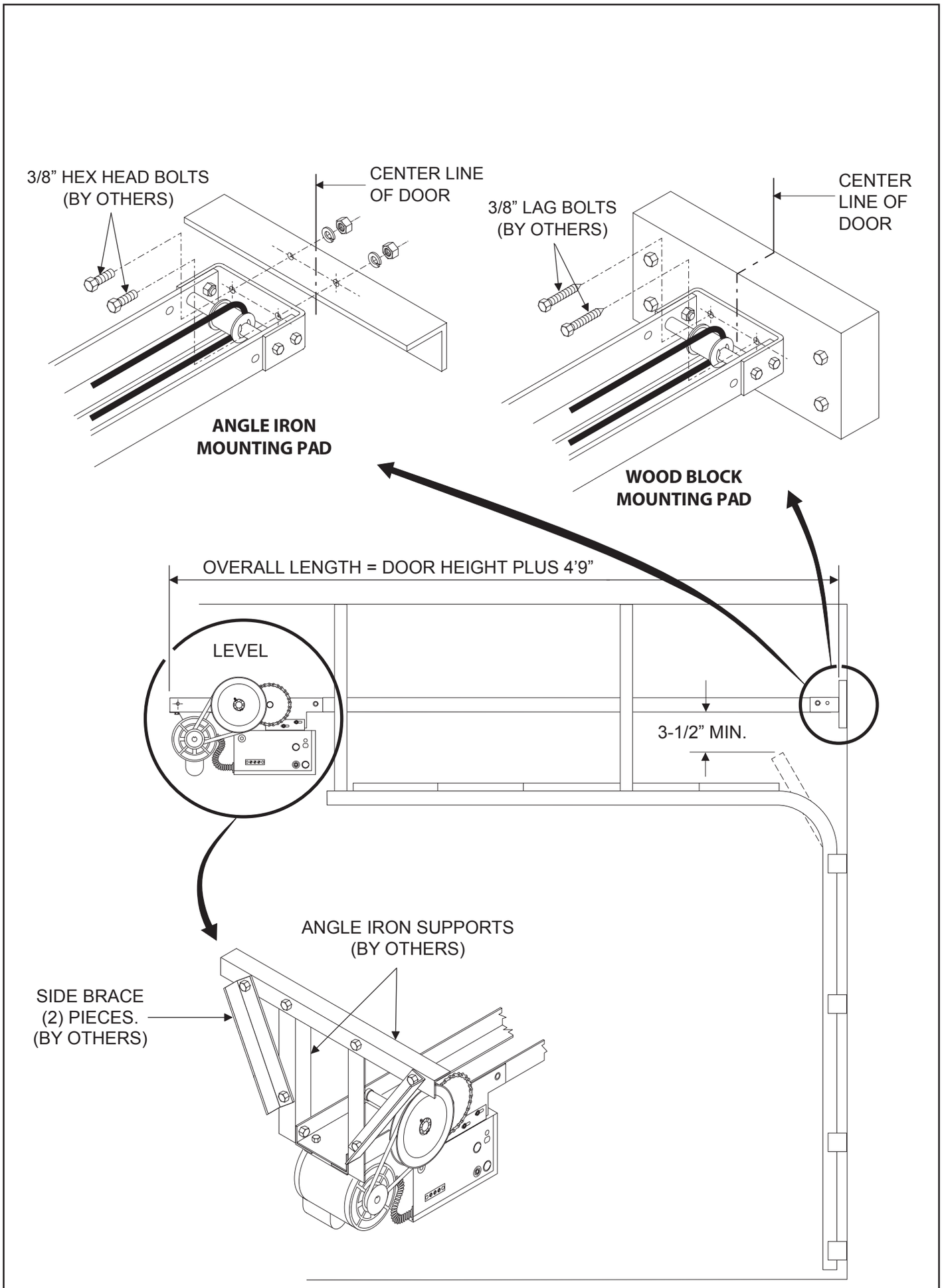
3/8” HEX HEAD BOLTS
(BY OTHERS)
CENTER LINE
OF DOOR
ANGLE IRON
MOUNTING PAD
3/8” LAG BOLTS
(BY OTHERS)
CENTER
LINE OF
DOOR
WOOD BLOCK
MOUNTING PAD
OVERALL LENGTH = DOOR HEIGHT PLUS 4’9”
LEVEL
3-1/2” MIN.
ANGLE IRON SUPPORTS
(BY OTHERS)
SIDE BRACE
(2) PIECES.
(BY OTHERS)

FIGURE 10

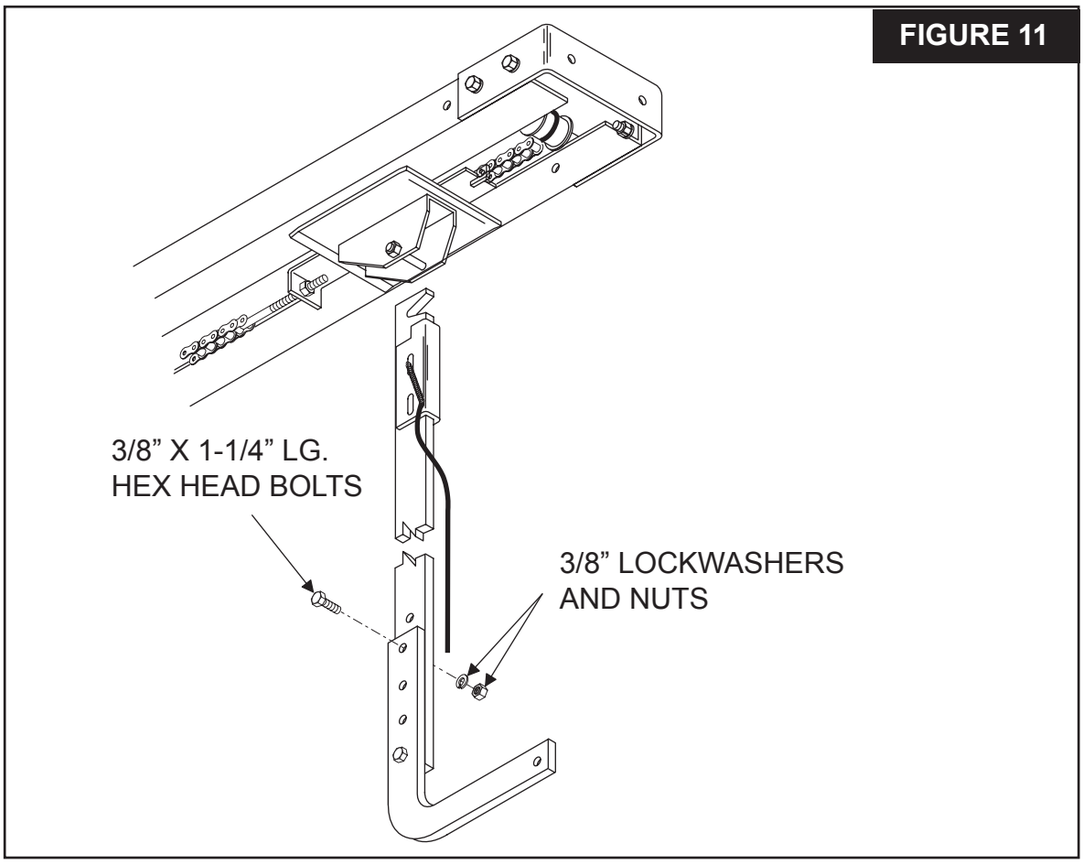

FIGURE 11

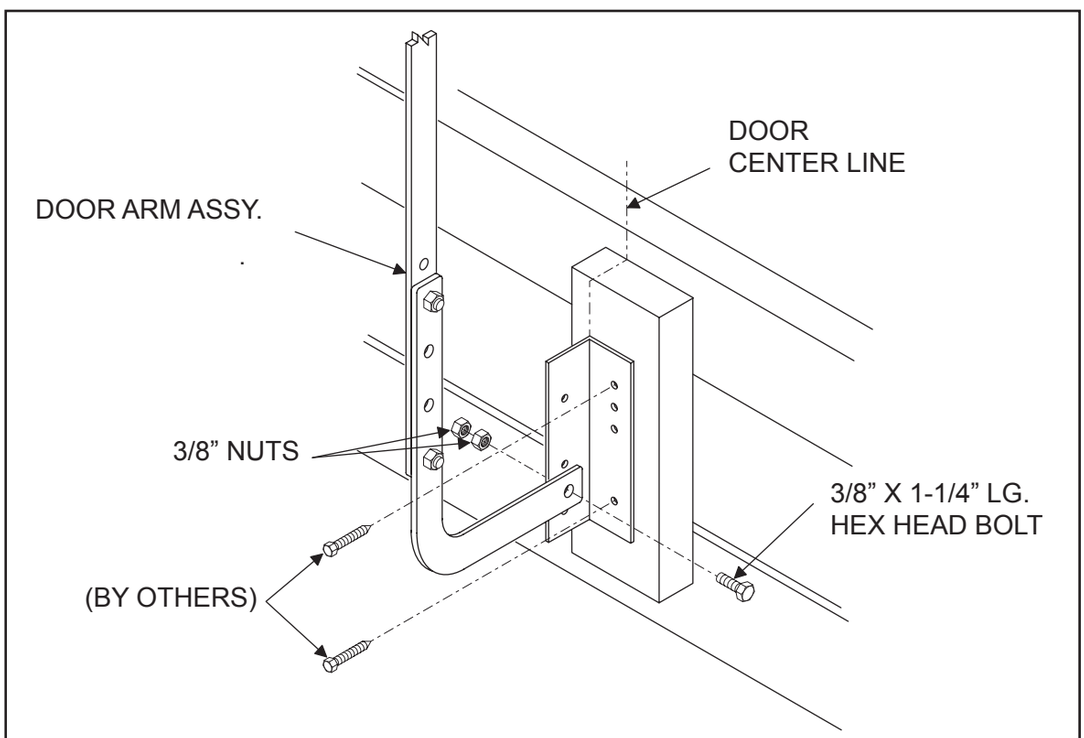

FIGURE 12

WARNING	TO AVOID RISK OF ENTRAPMENT AND POSSIBLE DAMAGE TO THE DOOR AND OPERATOR, THE LIMITS MUST BE ADJUSTED BEFORE APPLYING POWER TO THE OPERATOR.

SETTING THE LIMIT SWITCHES

1. Remove the cover on the electrical enclosure. There are two limit nuts on the threaded limit shaft that move laterally along the shaft as the operator opens and closes the door. When a limit nut nears the end of the shaft, it activates a (set of) switch(es). The *Open* Limit Switch is on the LEFT, and the *Close* Limit Switch is on the RIGHT. Auxiliary switches may also be present to control other function (They are mounted to a separate bracket and should not be confused with the *Open* and *Close* limit switches, which are mounted on the back of the electrical enclosure box and are somewhat hidden from view).

2. Manually set the door to a nearly closed position.

3. Refer to **Figure 8**. Depress the Limit Nut Retaining Bracket away from the slots in the limit nuts. Turn the Close Limit Nut on the shaft until it engages the Close Limit Switch. The switch will sound an audible "click" when engaged. If there are auxiliary switches present, the limit switch will be the second "click." Release the Retaining Bracket and be sure that it engages in slots of both limit nuts.

4. Manually raise the door to a *Nearly Open* position, and repeat Step #3 with the Open Limit Nut and Switch.

5. If auxiliary switches are present, the limit nut will actuate them just prior to activating the Open or Close Limit Switch (This is pre-set at the factory).

6. Manually move the door to a half-open position to avoid door damage due to incorrect power supply phasing. With the door in mid-position, there will be time to stop the door before damage can happen if incorrect phasing occurs.

7. A final limit adjustment will be necessary after the connection of the power supply in order to ensure the door stops in the proper *Open* and *Close* positions.

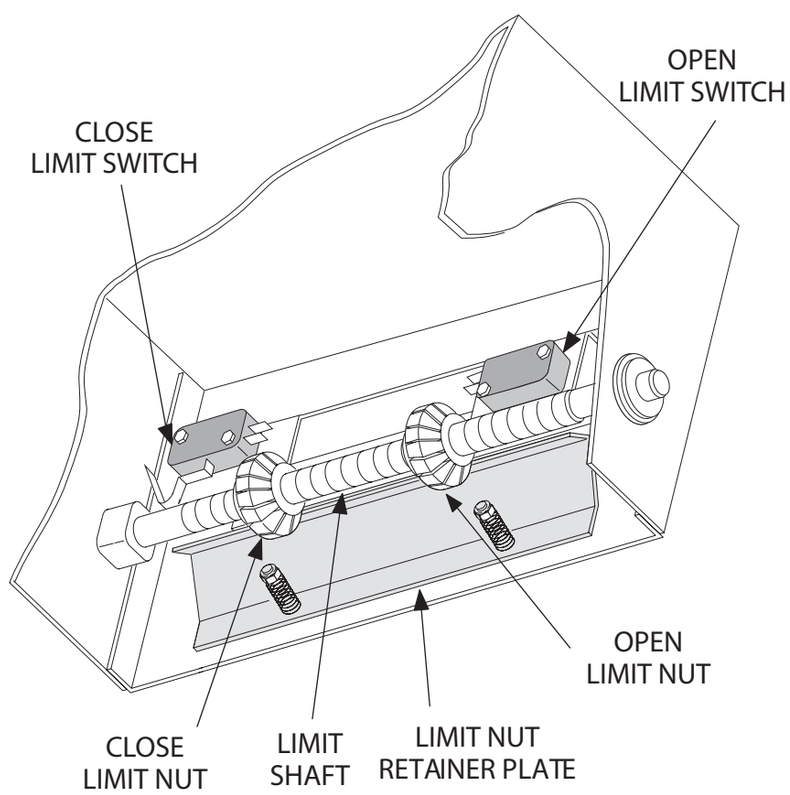

FIGURE 13

ELECTRICAL WIRING INSTRUCTIONS

NOTE: PowerMaster MT Drawbar operators have been designed and constructed for use with voltages from 115 Volts AC in single phase. Check the operator nameplate label on the control box cover for the proper voltage and phase. The application of an improper input voltage or phase will result in catastrophic failure to the internal electrical components. Observe local electrical codes when wiring the operator.

When hard wiring, observe state and local electrical codes. A wiring diagram is attached to the inside of the control box cover. Connect the appropriate voltage and phase power leads to the appropriate terminals as per the wiring diagram and connect a ground wire to the grounding screw. The wiring diagram attached inside the cover of the control box details all of the field wiring terminal connections for the operator. Always connect the wires to the push button controls and auxiliary devices exactly as shown.

Warning: Control voltage of the operator is 24 Volts AC, Class 2. Do not run the power leads and control circuit wiring in the same electrical conduit.

WARNING

TO PREVENT THE RISK OF PERSONAL INJURY OR DEATH:

- **DISCONNECT POWER AT THE FUSE BOX BEFORE PROCEEDING**
- **ELECTRICAL CONNECTIONS MUST BE MADE BY A QUALIFIED INDIVIDUAL**
- **OBSERVE LOCAL ELECTRICAL CODES WHEN WIRING THE OPERATOR**

WARNING

TO PREVENT THE RISK OF PERSONAL INJURY AND/OR DAMAGE TO DOOR OR PROPERTY, ONLY OPERATE DOOR CONTROL WHEN DOOR IS IN CLEAR VIEW. IF CONTROL STATION CANNOT BE LOCATED WHERE THE DOOR IS VISIBLE, OR IF ANY OTHER DEVICE IS USED TO CONTROL THE DOOR, AN AUXILIARY ENTRAPMENT DEVICE MUST BE CONNECTED TO THE UNIT.

NOTE: All T operators are pre-wired to accept reversing edge components. To comply with UL requirements, one of these systems must be installed and wired to the operator. Refer to **Figures 9 and 10** for Edge Component Wiring and Installation.

For operator models not installed with reversing edge components or photoelectric device, ONLY ONE THREE BUTTON STATION OR A CONTROL WIRED FOR CONSTANT PRESSURE TO CLOSE MAY BE USED TO CONTROL THE OPERATOR. THIS IS TO COMPLY WITH UL SAFETY REQUIREMENTS. IN THIS CASE, THE CONTROL STATION MUST BE LOCATED WITHIN CLEAR SIGHT OF THE DOOR ADJACENT TO THE CONTROL STATION, THE WARNING PLACARD (INCLUDED WITH THE OPERATOR) MUST BE INSTALLED (**Figure 14)**

WARNING: TO PREVENT ENTRAPMENT, DO NOT START DOOR DOWNWARD TRAVEL UNLESS DOORWAY IS CLEAR

FIGURE 14

WARNING	RISK OF ENTRAPMENT THAT MAY RESULT IN SERIOUS PERSONAL INJURY OR DEATH. DISCONNECT POWER TO THE OPENER BEFORE AND DURING INSTALLATION OF AN ACCESSORY, REVERSING DOOR EDGE OR PHOTOELECTRIC DEVICE. DO NOT RECONNECT POWER TO OPENER UNTIL INSTRUCTED TO DO SO. ENSURE DOORWAY IS CLEAR BEFORE STARTING TESTING OF UNIT.

CAUTION

TO AVOID DAMAGE TO DOOR AND OPERATOR, ENSURE ALL DOOR LOCKS ARE DISABLED. USE AN INTERLOCK SWITCH IF A LOCK IS REQUIRED TO RETAIN FUNCTIONALITY.

ACCEPTED SAFETY EQUIPMENT

- Photoelectric safety sensors manufactured by Linear Corp.
- Door Edge Sensor and Interface Module manufactured by Miller Edge model series designated ME, MT, MU and CPT223 with suffix T2 provided with interface module model Signature Module model SM-102.
- Optical Door Edge Sensor and Photo Eye manufactured by Fraba Inc. models OPTOEDGE, OPTOEYE; Part Nos. OSE-T, OSE-R, OSE-P, OPE.

SEE MANUFACTURER'S INSTRUCTIONS FOR INSTALLATION OF THIS SAFETY EQUIPMENT.

IMPORTANT SAFETY INSTRUCTIONS FOR OWNER

WARNING

TO REDUCE THE RISK OF SEVERE INJURY OR DEATH: READ AND FOLLOW ALL INSTRUCTIONS!

- NEVER let children operate or play with door controls. Keep remote control away from children.
- ALWAYS keep a moving door in sight and keep people and objects away from the door area until the door is completely closed. NO ONE SHOULD CROSS THE PATH OF A MOVING DOOR.
- TEST THE DOOR OPENER'S REVERSING FEATURE MONTHLY (where applicable). The door MUST reverse upon contact with a 4" high object on the floor.
- After adjusting the force setting, ALWAYS RETEST THE OPENER. Failure to adjust the opener properly may result in serious injury or death.
  - DO NOT over adjust the force setting (clutch) to compensate for a poorly working door.
- KEEP THE GARAGE DOOR PROPERLY BALANCED (See the door owner's manual).
- AN IMPROPERLY BALANCED DOOR MAY CAUSE SEVERE INJURY OR DEATH.
- Have a QUALIFIED SERVICE PERSON make repairs to cables, spring assemblies and other hardware.
- **SAVE THIS INSTRUCTION MANUAL AND GIVE IT TO THE END USER.**

NOTE: It is now necessary to turn on the power in order to run the Opener to check for proper operation and limit settings. Before doing so, ensure that all mounting hardware are installed and properly tightened, that all electrical connections are per local code requirements, and that proper wiring practices have been followed. **Also, double-check that all ropes have been removed from the door and that the doorway is clear.**

WARNING

FAILURE TO TEST REVERSING SYSTEM COULD RESULT IN DEATH OR SERIOUS INJURY. TEST THIS SYSTEM ONCE A MONTH.

WARNING

AVOID ELECTROCUTION: DO NOT ROUTE LOW VOLTAGE WIRES IN SAME CONDUIT AS HIGH VOLTAGE WIRES. FOLLOW ALL LOCAL ELECTRICAL CODES OR THE NATIONAL ELECTRICAL CODE (NEC).

WIRING TERMS

MOMENTARY CONTACT: Button can be pushed and then released and door will keep moving or stop without maintaining pressure on the button.

CONSTANT PRESSURE: Constant pressure is required on the button in order for continued door movement. When the button is released, the door will stop and possibly reverse to full open depending on wiring type.

DOOR EDGE/ PHOTOELECTRIC INPUT: The operator wiring provides for input from an electric door safety edge or photoelectric device that will cause a closing door to stop and reverse it to open.

CLUTCH ADJUSTMENT

The clutch serves to protect the door, the electric operator and other equipment from undue stress or damage caused by starting forces and/or an obstruction to the door. It should be set NO TIGHTER than is necessary to smoothly and consistently move the door throughout its full range of travel. When properly set, it will slip freely if the door should encounter an obstruction, and it should be possible to stop the travel of the door by hand.

WARNING: BEFORE ADJUSTMENT, REMOVE POWER TO THE OPERATOR!

CAUTION: NEVER COMPRESS CLUTCH SPRING BEYOND POINT LIMITED BY THE DESIGN OF THE OPERATOR OR REPLACE IT WITH A HEAVIER SPRING.

1. Remove cotter pin from slotted hex nut and clutch shaft.
2. Back off slotted hex nut until there is insufficient tension on clutch spring to permit clutch to drive door.
3. Tighten slotted hex nut gradually until there is just enough tension on spring to permit operator to move door smoothly, but to allow clutch to slip if door is obstructed.
4. Be sure cotter pin is reinstalled each time operator is tested for clutch adjustment and that it is locked in place upon completion of adjustment.

Due to changing conditions of the door and normal wear, it may be necessary to occasionally re-adjust the clutch to obtain dependable operation.

WARNING: BEFORE DOING SO, BE CERTAIN THAT THE DOOR IS IN GOOD WORKING CONDITION, IS PROPERLY COUNTERBALANCED, AND THAT THE CLUTCH IS NOT SLIPPING BECAUSE OF LOOSE OR MISSING HARDWARE, BINDING IN THE TRACK, RUBBING AGAINST THE DOOR STOPS, OR DEFECTIVE OR MISADJUSTED SPRINGS. ANY SERVICE REQUIRED TO THE DOOR, DOOR SPRINGS OR DOOR OPERATOR MUST BE PERFORMED BY A QUALIFIED PROFESSIONAL DOOR INSTALLER.

WARNING

RISK OF ENTRAPMENT THAT MAY RESULT IN SEVERE INJURY OR DEATH! DISCONNECT POWER TO THE OPERATOR BEFORE SERVICING OR MAKING ADJUSTMENTS. ENSURE DOORWAY IS CLEAR BEFORE STARTING TESTING OF UNIT.

CAUTION

ALWAYS DISCONNECT POWER TO THE OPERATOR BEFORE SERVICING, CONNECTING ACCESSORY DEVICES OR MAKING ADJUSTMENTS.

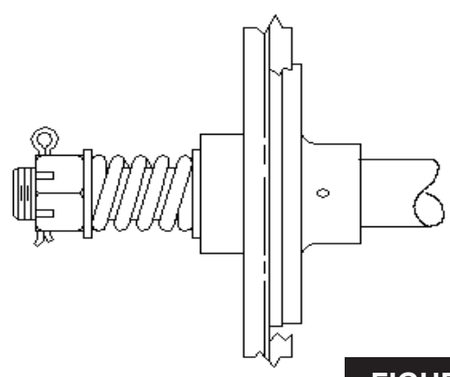

FIGURE 15

WARNING

IMPROPER ADJUSTMENT OF CLUTCH SETTING COULD CAUSE ENTRAPMENT, INJURY OR DEATH. SET CLUTCH ADJUSTMENT FOR JUST ENOUGH FORCE TO OPERATE THE DOOR RELIABLY, BUT NO STRONGER. CONTACT A SERVICE PROFESSIONAL TO CORRECT ANY BINDING, STICKING OR OTHER DOOR PROBLEMS. DO NOT OVER-ADJUST CLUTCH SETTING TO COMPENSATE FOR A POORLY WORKING DOOR.

The clutch pad will wear during normal operation and should be replaced when it becomes difficult or impossible to sufficiently tighten the clutch to obtain smooth operation of the door when it is in good working condition. To replace the clutch pad, first loosen the motor mounting bolts and remove the V-belt, followed by the clutch adjusting nuts, spring and clutch pulley. Check condition of V-belt before reassembly and replace if required.

WARNING

ALWAYS DISCONNECT POWER TO THE OPERATOR BEFORE SERVICING, CONNECTING ACCESSORY DEVICES OR MAKING ADJUSTMENTS.

WARNING

DO NOT STAND UNDER DOOR TO TEST REVERSING EDGE. USE A CORRUGATED BOX OR SIMILAR OBJECT.

TESTING

Following installation, the operator MUST be tested and respond correctly to all controls as specified on the wiring diagram. Keep personnel and equipment clear of the area around the door when performing the tests. When testing the 3-button wall station, first observe that each button operates the door in the direction indicated and that the STOP button performs that function. With the door stopped at its full open position, the OPEN button should be inoperative. This should be verified and, likewise, the CLOSE button should be inoperative with the door fully closed.

Certain operator control circuits use only a single-button or a 2-button control station, and may be designed to function differently than the more common 3-button circuit described above. Test the controls in accordance with the proper response for your installation.

Observe the door when traveling in each direction for smoothness of operation. Test the setting of the clutch by restraining the door by hand. The clutch should slip. Re-check the limit settings. The door should close tightly at the floor without excessive impact. Likewise, it should fully clear the door opening without the trolley traveler coming too close to the power head.

To test it for proper reversal, place an object beneath the leading edge of the door. The door should instantly reverse when it comes into contact with the object, provided the height of the object exceeds the cut out point built into the Close Limit Switch (approximately four inches).
To test the manual disconnect, first move the door to the fully closed position. Next, disconnect the power to the operator. *Manual Door Operation* mode should engage when the release cord is pulled and the door arm assembly releases from the trolley traveler. If it is difficult to disengage or engage the door arm assembly at the closed position because the chain appears to be under compression, reset the CLOSE limit slightly to reduce the door travel in the close direction.

MAINTENANCE SUGGESTIONS

Normally, very little maintenance is required. A monthly visual inspection must be made for loose or missing hardware and for excessive slack in the V-belt and Jackshaft Chain. The clutch must be checked periodically and adjustments made if necessary.

WARNING

DO NOT STAND UNDER DOOR TO TEST REVERSING EDGE. USE A CORRUGATED BOX OR SIMILAR OBJECT.

Test the reversing edge circuit or components (where applicable) at least once a month by permitting the door to contact an obstruction while closing (Refer to ***Testing*** section of the manual).

Lubrication of the operator is not required. It is important — for trouble-free service from the operator — that the door be kept free from binding, is properly counter-balanced and periodically lubricated. **An annual inspection of the door BY A QUALIFIED SERVICE TECHNICIAN IS RECOMMENDED.***

**The door must be in good operating condition. An electrical door operator cannot move a garage door that is in poor condition. The door must operate freely in the track, with no binding or obstructions, and must be well-balanced. Check the spring balance of your door by bringing the door to a half-open position and leaving it there. If the door stays in that position, it is well balanced. If it moves more than a few inches, the springs possibly need adjustment. CALL A QUALIFIED SERVICE TECHNICIAN.*

WARNING: Repairs and adjustments to the door and the door operator should be performed only by someone qualified to service commercial overhead doors and operators.

We constantly strive to maintain and improve qualify of our products. Therefore, the components shown in the illustrations were accurate at time of printing but are subject to change without notice as quality improvements are made.

TROUBLE SHOOTING CHART

SYMPTOM	POSSIBLE CAUSE	SOLUTION
Motor runs but door does not move	Door jammed or obstructed.	Check manual operation of door.
	Trolley disconnected from drive with door arm release.	Reconnect door arm to trolley traveler.
	Clutch slipping/ V-Belt slipping	Check clutch adjustment. Check belt for wear and proper tension.
Limit switches do not hold setting	Drive chain too loose; permits chain to jump teeth on sprocket.	Adjust chain to proper tension.
	Limit sprocket slipping on limit shaft.	Check set screws for tightness.
	Limit nut retaining bracket not engaging notches in nuts.	Set nuts and be sure bracket is in notch on each nut.
Door drifts when operator shuts off	If equipped with brake, brake is not functioning properly.	Check stroke and spring pressure on brake arm. Adjust if necessary.
	Door spring tension incorrect.	Disconnect operator and check operation of door.
Motor hums - does not run	Dead phase (on 3-phase).	Check power supply.
	Brake (if equipped) does not release.	Check wires to brake solenoid; check adjustment.
	Door locked or jammed.*	Check door. Try manual operation.
Motor does not run when open or close wall button is pressed	Building fuse blown or circuit breaker tripped.	Check power supply fuses, circuit breakers, and disconnect switch for cause.
	Overload protector tripped.	Reset and check for cause.
	NOTE: To isolate cause, operate contactor solenoid plunger manually. If motor runs, cause is in push-button circuit.	Check control wiring. Contact Tech Support at 1-800-243-4476.
	Interlock switch broken or inoperative (Only applies to units with manual hoist chain option).	Check that disconnect pin is not making contact with interlock switch located inside base frame. Check wiring to switch and switch function. Normally closed for operation electrically and normally open for hand chain operation.
	IR Relay not functioning (1-phase)	Relay is on when power first applied; drops out when motor runs.
Operator closes door when ***OPEN*** button is pressed, and limit switches do not function properly.	On 3-phase operators, power supply is connected out of phase.	Interchange connections of any two power supply leads (See wiring diagram).
	Operator controls not wired correctly, or unit mounted upside down.	Check control wiring connections on wiring diagram and check orientation of unit. Contact Tech Support at 1-800-243-4476.
Operator fails to shut off at fully Open or fully Closed position	On 3-phase operators, power supply is connected out of phase.	Check phase as above.
	Limit nuts not adjusted properly.	See Limit Adjustments section of manual.
	Defective limit switch.	Check continuity. Replace limit switch if necessary.
	Single phase operator (without instant reverse motor). Stuck push-button or short in control wiring.	Check that limit nuts are moving correctly when operator runs and that they activate limit switch.
	Limit drive chain broken or inoperative.	Replace chain, check limit screw for rotating.
	1 phase unit with motor rotation wrong.	Usually occurs after motor replacement. Check for correct type motor, motor wiring, and correct operator mounting.

Notes

PowerMaster

Limited 2-Year Warranty

MECHANICAL PARTS:
PowerMaster warrants all DOOR OPERATORS (MG, H, J, T, SL categories) to be free of defects in materials and workmanship for a period of two (2) years from date of manufacture, provided that product has been registered. A one year warranty applies if product has not been registered.

ELECTRICAL PARTS (including boards, switches, relays, etc):
PowerMaster warrants electrical parts for a two (2) year period, provided that product has been registered. A one year warranty applies if product has not been registered.

If any part is found to be defective during this period, new parts will be furnished free of charge. Failure of this product due to misuse, improper installation, alterations, vandalism, acts of God, or lack of maintenance is ***not*** covered under this warranty, and voids any other implied warranties herein.

PowerMaster is ***not responsible*** for any labor charges incurred in connection with the installation of warranted parts.

In order to activate this warranty, the registration form found with your operator **MUST BE COMPLETED AND RETURNED WITHIN THIRTY CALENDAR DAYS FROM DATE OF PURCHASE.** Visit our website at www.PowerMasterNY.com and click on the ***Register your Product*** link.

You can also register via email to PMtech@PowerMasterNY.com.

If registration is not activated, a **ONE YEAR** warranty from date of manufacture will apply for all claims.

REGISTRATION INFORMATION

Operator Information

Model MT

Serial # _____

Date Installed _____

Location Installed

Address _____

Address _____

Address _____

Installer's Information

Company Name _____

Address _____

Address 2 _____

City, State, Zip _____

Telephone # _____

Contact Name _____

Need Technical Support?

Visit: www.PowerMasterNY.com/faqs

Call us toll free @ 1-800-243-4476

Email us: PMtech@PowerMasterNY.com

www.facebook.com/PowerMasterOperators

Scan **QR Code** with your Smart phone to **find us** on the web!

www.PowerMasterNY.com

powermaster

MANUFACTURED BY V.E. POWER DOOR CO,INC.

REV 2018-0330