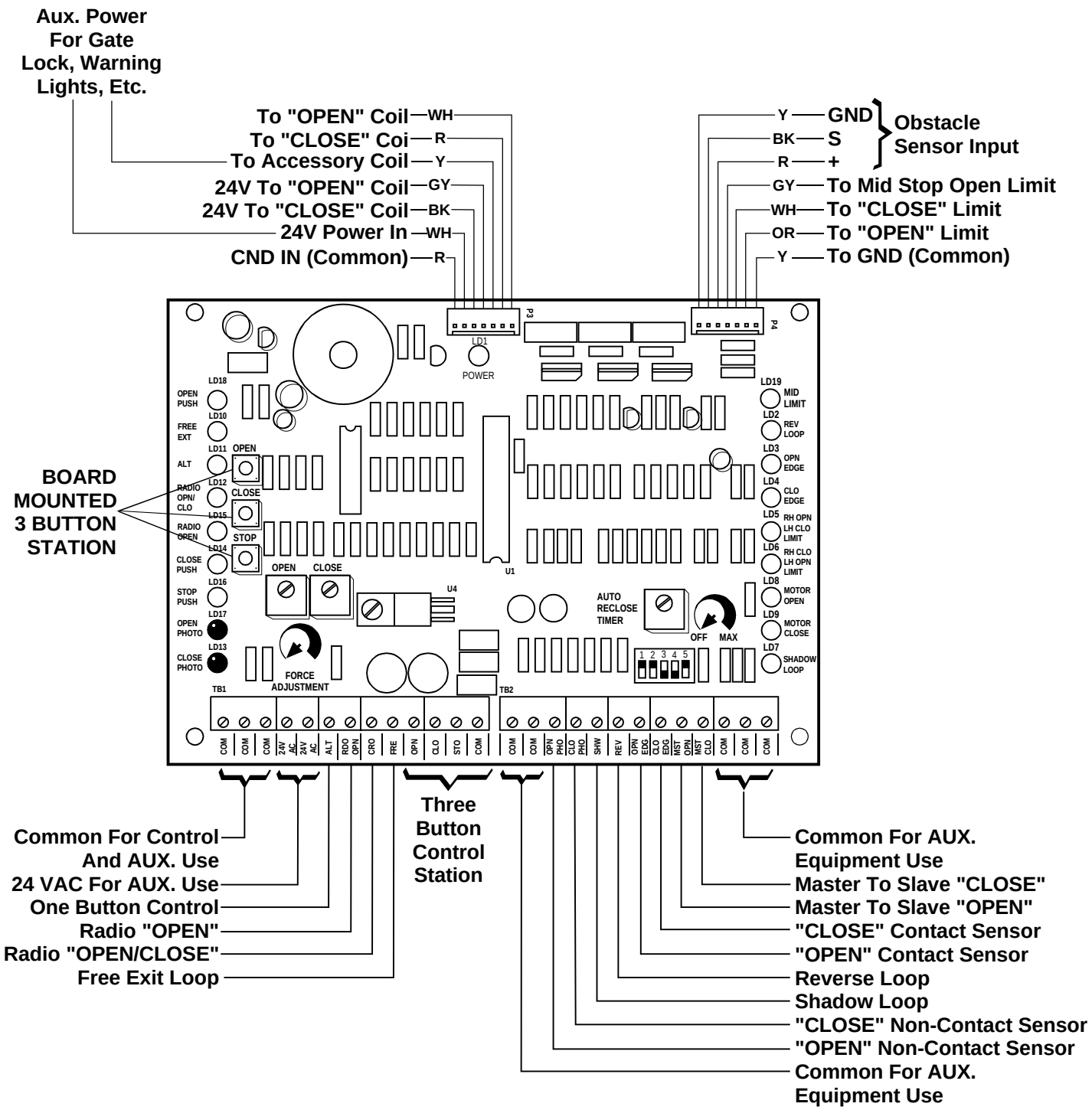# WIRING TO 2004 UMCB-01 CONTROL BOARD