INSTALLATION AND OWNER'S MANUAL

MODEL D-SBG

Single Arm Barrier Gate Operator

UL 325 and UL 991 Listed

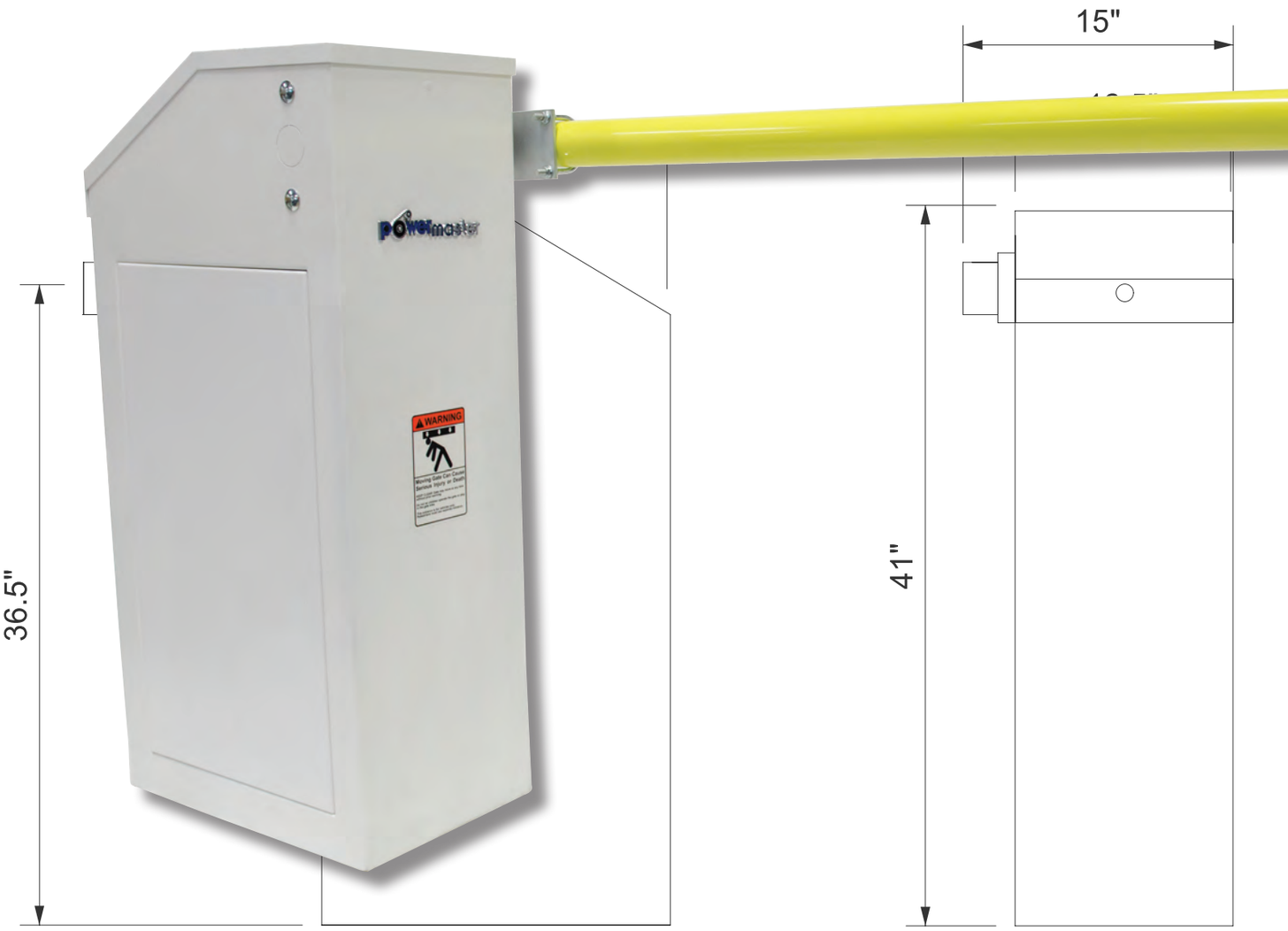

WITH NEW NITRO BOARD INSTRUCTIONS INCLUDED!

Serial #:
Date Installed:
Your Dealer:

READ THIS MANUAL CAREFULLY
BEFORE INSTALLATION OR USE.
SAVE THESE INSTRUCTIONS.

Table of Contents
Model D-SBG Single Arm Barrier Gate Operator

Important Safety Information 3
Important Notice for Gate Operators Manufactured after 1/11/16 4
System Designer Safety Instructions.....5
Installer Safety Instructions 6-7
End User Safety Warnings 8-9
Manual Operation 11
Safety Warnings 12

Installation & Setup Procedure
- Before Installing Operator 10
- Installation of Cement Pad 11
- Installation of Operator 12-13
- SBG Pipe Arm Assembly 14
- Installation of Barrier Arms 15-16
- Electrical Connections 17
- Manual Operation 18
- Limit Adjustment 18-19
- Auxiliary Limit Switch 20

Safety Device Connections
Installation of Edge Sensor or Photo Eyes 20

Accessory Connections
- Loop Detector Systems 21
- Loop Installation (Standard Layout Chart) 22
- Cutting the Required Groove 22

PowerMaster Controller Instructions 24

Warranty 39

IMPORTANT!

SAFETY IS EVERYONE'S BUSINESS.

Automatic gate operators provide convenience and security to users. However, because these machines can produce high levels of force, it is important that all gate operator system designers, installers, and end users be aware of the potential hazards associated with improperly designed, installed, or maintained systems. Keep in mind that the gate operator is a component part of a total gate operating system.

The following information contains various safety precautions and warnings for the system designer, installer and end user. These instructions provide an overview of the importance of safe design, installation, and use.

Warnings are identified with the ▲ symbol. This symbol will identify some of the conditions that can result in serious injury or death. Take time to carefully read and follow these precautions and other important information provided to help ensure safe system design, installation and use.

▲ **WARNING:** Gate operators are only one part of a total gate operating system. It is the responsibility of purchaser, designer, and installer to ensure that the total system is safe for its intended use. All secondary entrapment safety devices must be **RECOGNIZED BY UL** to ensure the safety of the complete operating system.

IMPORTANT NOTICE FOR GATE OPERATORS MANUFACTURED AFTER JANUARY 11TH, 2016

All gate operators manufactured after January 11th, 2016 must have a monitored input for each direction. In order to satisfy this requirement, all PowerMaster Swing & Slide Gate Operators will have one monitored input for each direction: The close obstruction (C-OBS) terminal for the close direction and the open obstruction (O-OBS) terminal for the open direction. These terminals will look for, or "monitor" the presence of a 10k inline resistor. If either terminal does not detect the presence of the monitored device the unit will function in constant contact for this direction.

E.g. The operator detects there is a monitored device on the C-OBS terminal but not the O-OBS terminal. The operator will function in momentary contact to close and constant pressure to open.

Following are the monitored devices acceptable for use:

Device	Manufacturer	Description
Prime-Guard	Miller Edge	Monitored Photoeye
Reflecti-Guard	Miller Edge	Retroreflective Monitored Photoeye
IRB-MON	EMX	Monitored Photoeye
IRB-RET	EMX	Retroreflective Monitored Photoeye
The Solution	Miller Edge	Multiple Safety Devices

Any actions taken to circumvent this monitoring are in violation of the UL325, building code, and local laws.

SYSTEM DESIGNER SAFETY INSTRUCTIONS

1. Familiarize yourself with the precautions and warnings for the installer. Users are relying on your design to provide a safe installation. The installation should have an entrapment protection system installed, such as photoelectric sensors or an electric edge.

2. When designing a system that will be entered from a highway or main thoroughfare, be sure the system is placed far enough away from the road to eliminate traffic backup. Distance from the road, size of the gate, usage levels, and gate cycle/speed must be considered to eliminate potential traffic hazards.

3. Design the gate system so a person cannot be trapped between the arm and any other fixed structure. All rigid objects must be at least 2 feet from the gate arm.

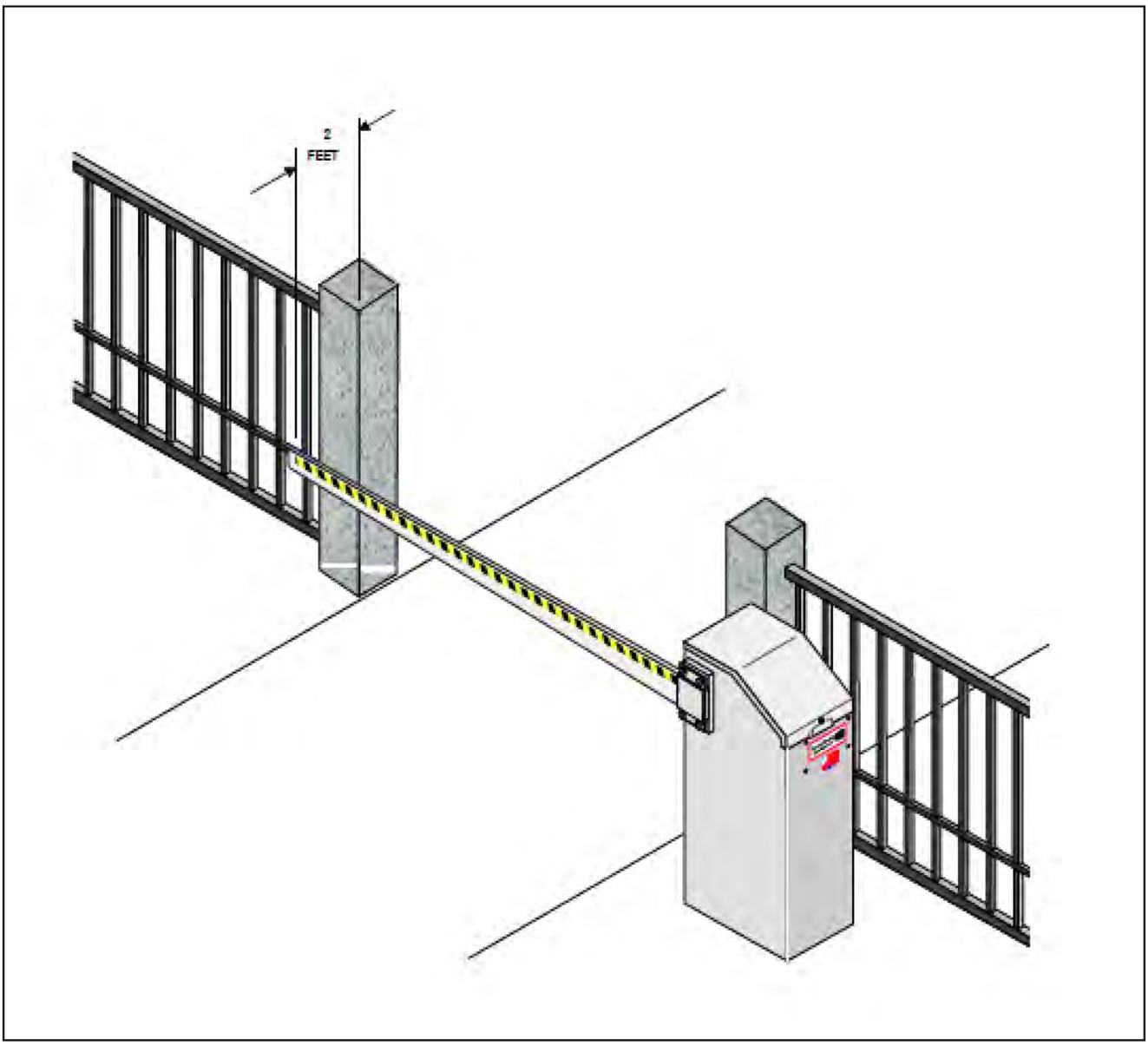

INSTALLER SAFETY INSTRUCTIONS

BEFORE INSTALLATION

1. Check to see that the operator is proper for this type and size of opening and its frequency of use. If you are not sure, consult factory.
2. Check to see that there are no structures adjacent to the area, which may pose a risk of entrapment when gate is opening or closing.
3. Safety equipment such as electric edges or photocell sensors must be installed to provide personnel, equipment, and property protection. For assistance in selecting the correct type of safety equipment, consult the factory.
4. You must install a pushbutton control or key switch to allow for normal operation of the gate if the automatic controls do not work. Locate the push button or key switch and small warning placard within sight of the gate in a secured area at least 10 feet or more from the gate and fence to keep users away from the moving gate and fence.
5. Outdoor or easily accessed gate controls should be of the security type to prohibit unauthorized use.

DURING INSTALLATION

1. Be aware of all moving parts and avoid close proximity to any pinch points.
2. Disconnect power at the control panel before making any electric service connections. Connection location for controls and safety equipment can be found on the wiring diagram, and in control board instructions.
3. Locate the controls at least 10 feet from the moving gate so that the user can observe the gate operation, but is not able to come in contact with the gate while operating the controls.

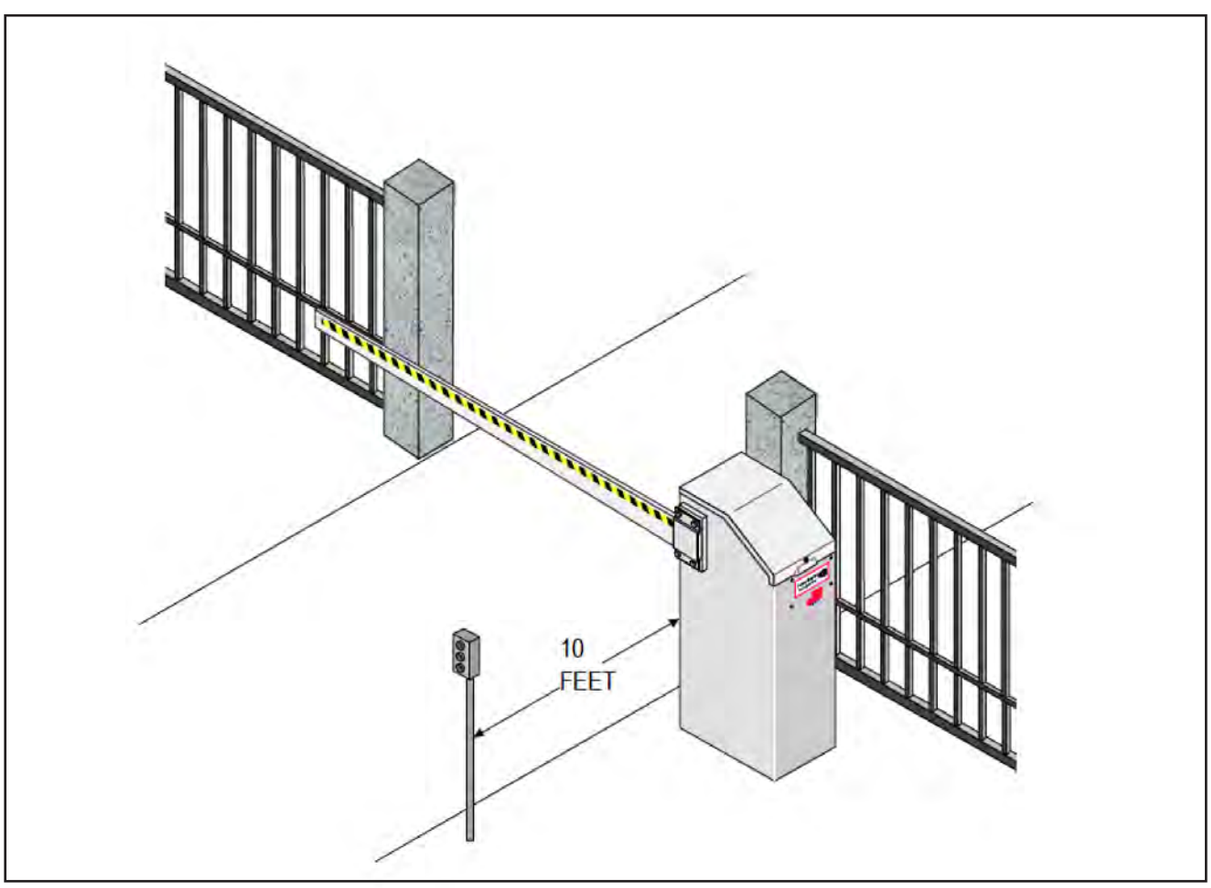

AFTER INSTALLATION

- ▲ You are responsible for ensuring that the end user understands the basic operations and safety systems of the unit, including the proper way to disengage and manually operate this unit.
- ▲ Point out that the safety instructions in this manual are the responsibility of the end user, and then **LEAVE THIS MANUAL WITH THE END USER**.

END USER SAFETY WARNINGS

The manufacturer of the gate operator does not know what type of gate you have, or what type of automatic system is installed on your gate. Be sure you've been fully instructed on the sequence of operation for your specific gate system(s). Keep the gate properly maintained and have a qualified service person make repairs.

1. Be sure the following safety instructions are distributed to all persons authorized to use your gate.

2. **KEEP GATEWAY CLEAR (Front and Back) AT ALL TIMES**. Your automatic gate is not for pedestrian use. No one should ever cross the path of the moving gate.

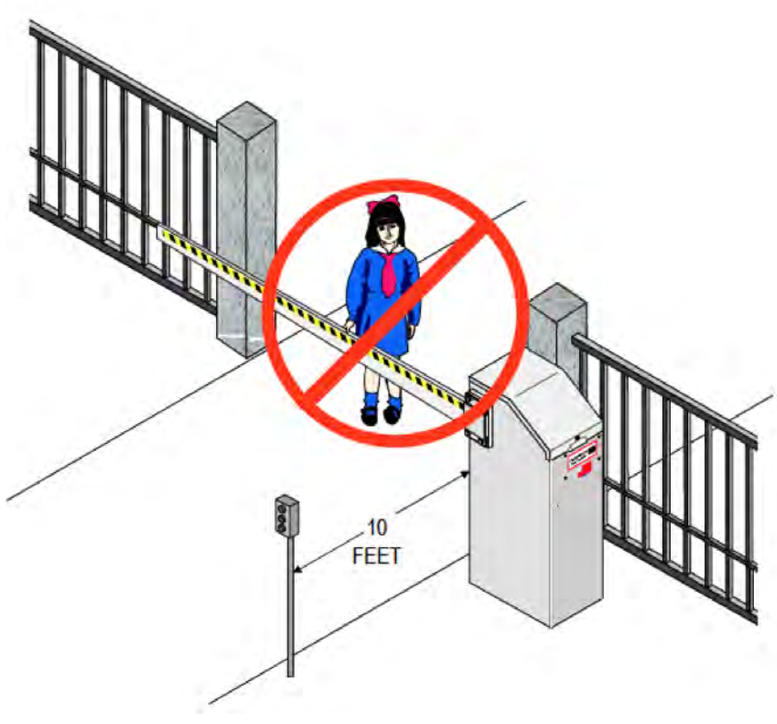

3. DO NOT allow children to play near your gate, or to operate the gate.

4. DO NOT operate your gate system unless you can see it when the gate moves.

5. Be sure a pushbutton or key switch has been installed for manual electric operation in the event your radio or card key does not work. Any mounted control station should be located a minimum of 10 feet from the gate so the gate cannot be touched. Any pushbutton located in a building should be installed within sight of the gate.

6. DO NOT operate any controls without watching the movement of the gate.

7. Be sure the gate arm DOES NOT come within 2 feet of any rigid object, therefore causing an entrapment situation.

8. If your gate closes automatically, loop detectors should be installed to detect the presence of a vehicle.

9. If a contact or non-contact safety system has been installed, check for proper operation at least once per month. **If these functions are observed to operate improperly, discontinue use and have it serviced immediately!**

10. To ensure safe operation of this equipment, you must read this safety manual and keep it for reference.

INSTALLATION INSTRUCTIONS

WARNING	**DO NOT APPLY POWER UNTIL TOLD TO DO SO! RISK OF ELECTRICAL SHOCK OR INJURY MAY RESULT!**

BEFORE INSTALLING OPERATOR

IMPORTANT:

1. Operator should always be mounted inside the gate.
2. All controls are to be mounted at least 10 feet from the gate arm.
3. Allow at least 2 feet clearance from rigid objects to gate arm.

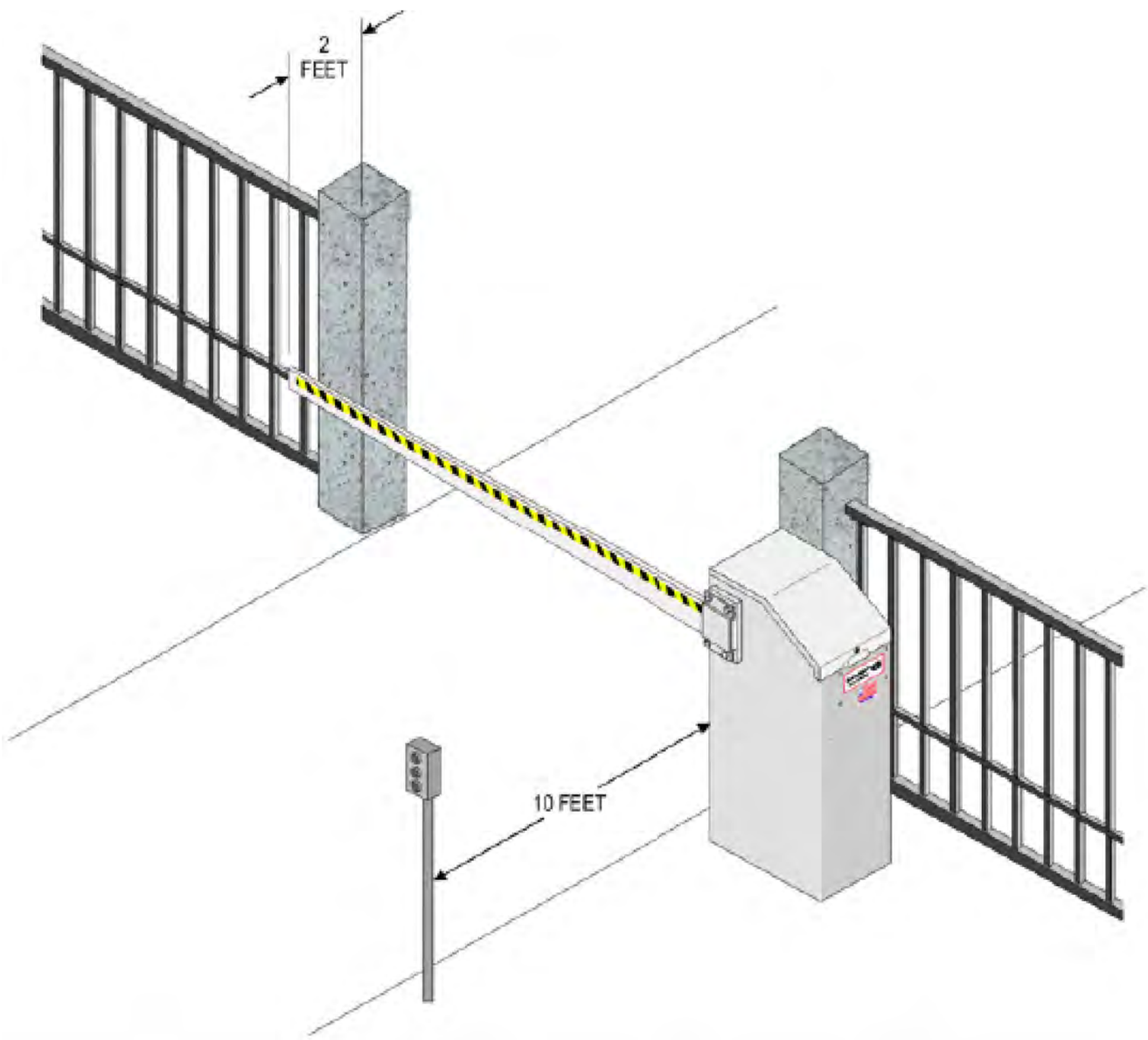

INSTALLATION OF CEMENT PAD

WARNING	INSTALL OPERATOR MOUNTING PAD SO MOVING ARM WILL ALWAYS BE AT LEAST 2 FEET FROM ANY FIXED OBJECT.

1. Install a mounting pad as shown below.

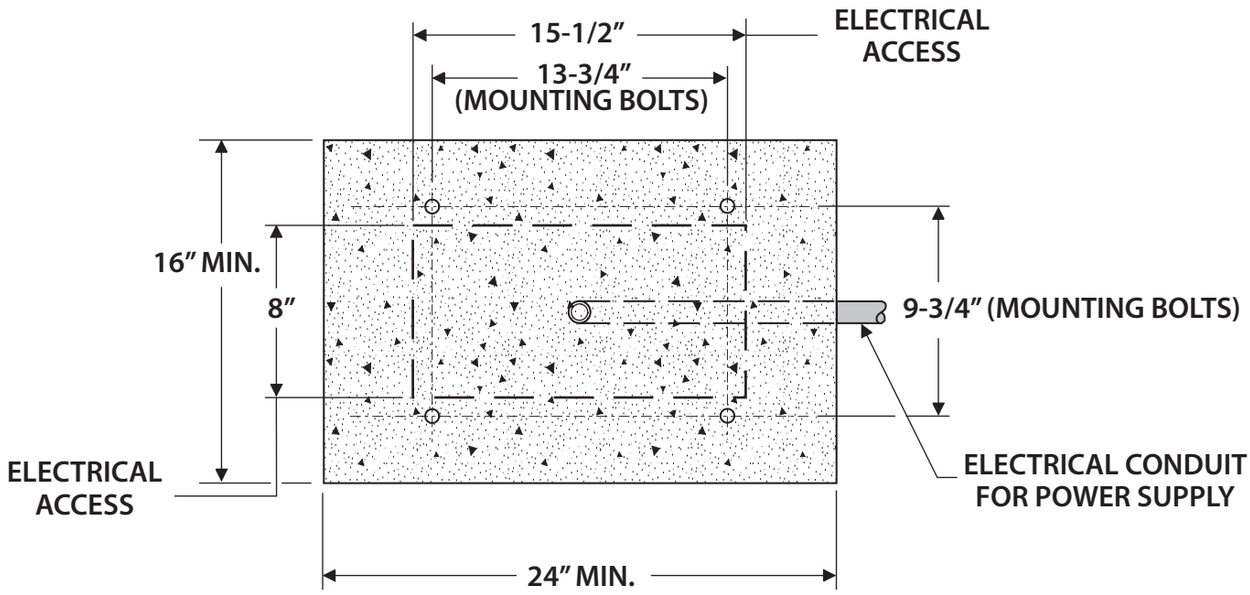

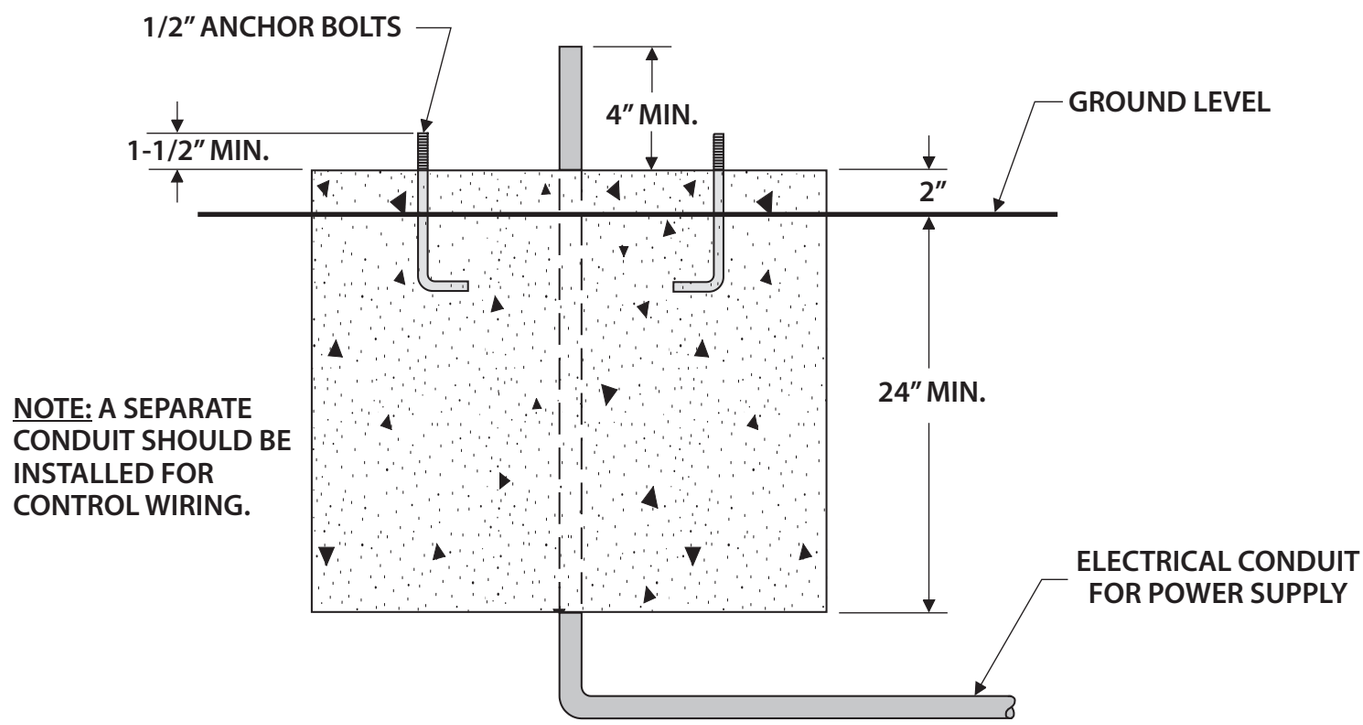

Note: Let cement cure for two days before proceeding.

INSTALLATION OF OPERATOR

1. Remove top cover as follows:
   - Insert key provided and unlock top cover
   - Lift cover from lock side and slide forward
   - Lift off cover

2. Remove side door of operator by reaching inside operator and unscrewing retaining knob at top of door. After removing retaining knob, push out top of door and lift away from operator. See **Figure 1** below.

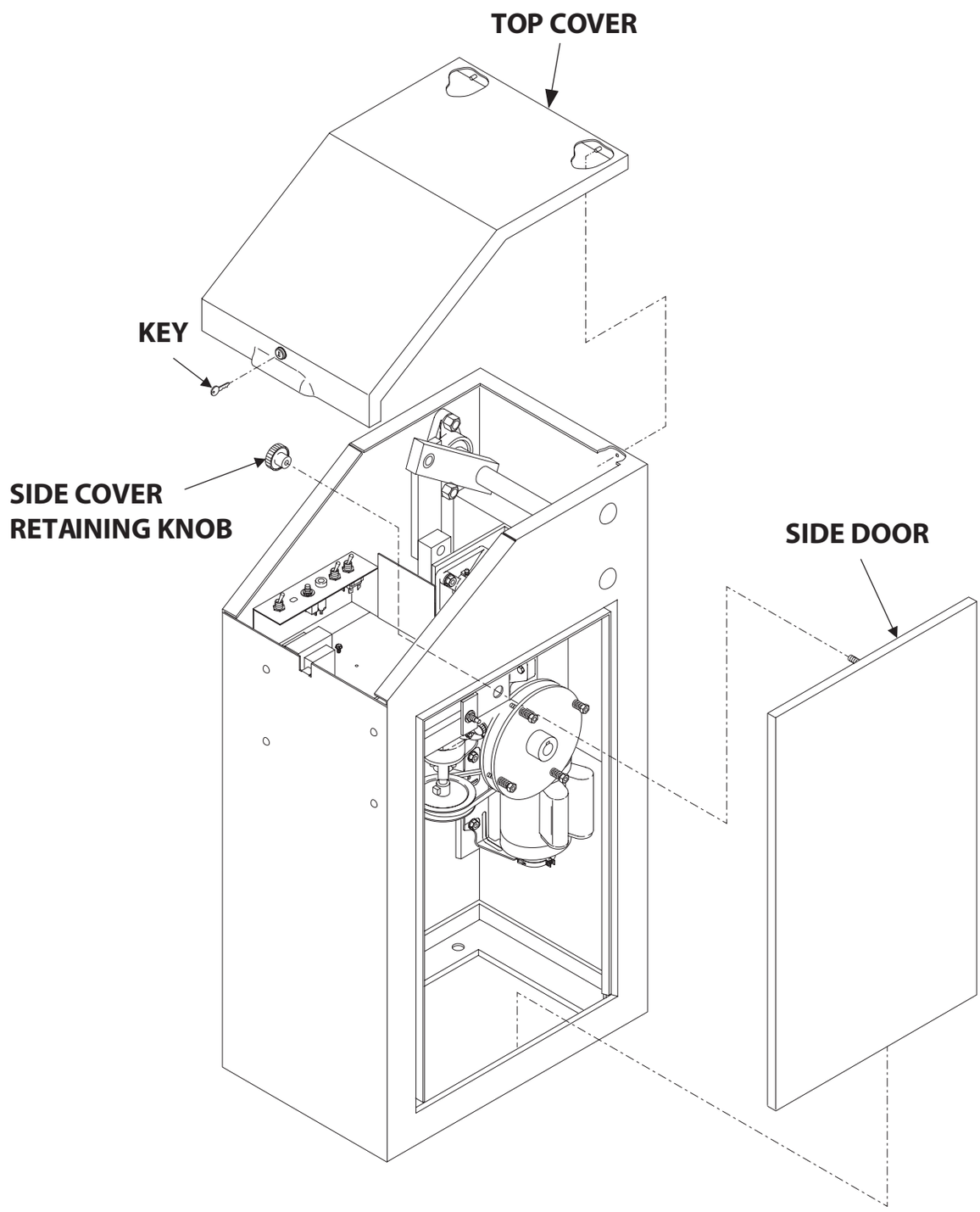

FIGURE 1

3. Mount operator on pad so that mounting bolts locate in operator base frame mounting holes and operator is parallel to fence line (See **Figure 2** below).
4. Secure operator to cement using ½" flat washers, lock washers and hex nuts as shown in **Figure 2**.

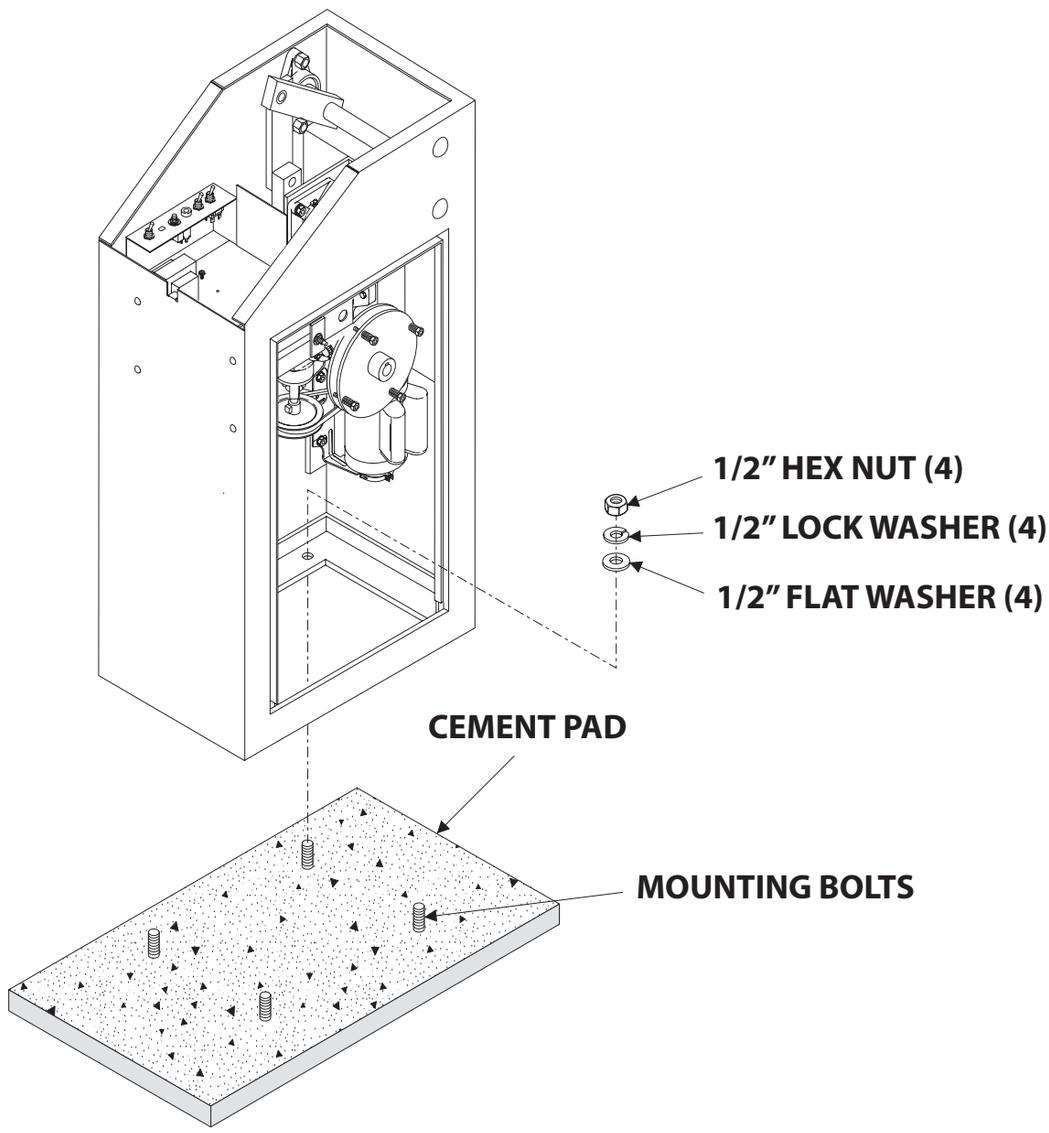

FIGURE 2

SBG PIPE ARM ASSEMBLY

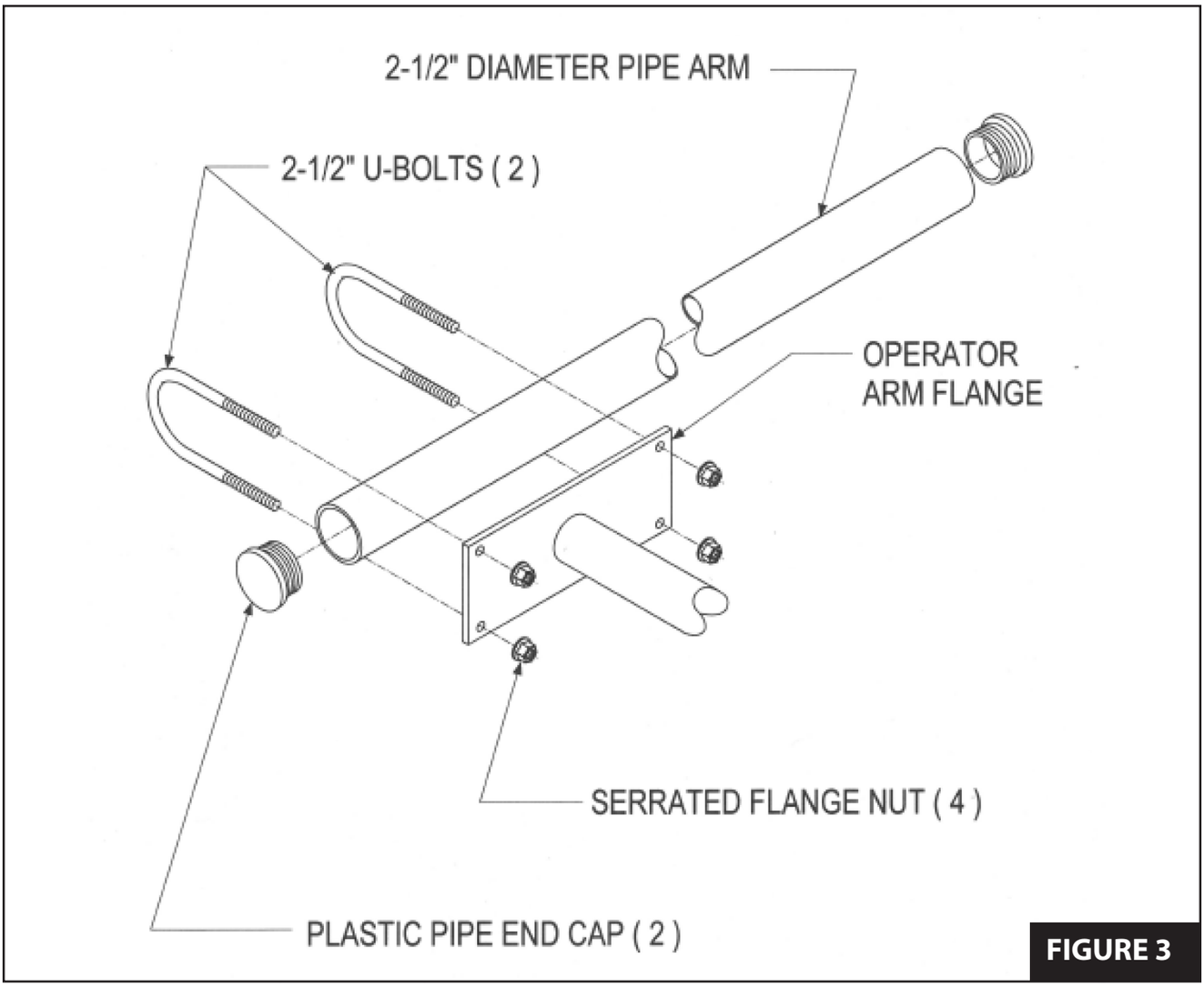

FIGURE 3

INSTALLATION OF BARRIER ARM

FOR 8', 10', OR 12' DOOR

1. Install arm cap using four (4) 1/2 x 1-1/2" long hex bolts, lock washers and nuts as shown in **Figure 4** below. Do not tighten until told to do so.
2. Insert large end of wood arm into arm cap until flush with opposite edge of arm mounting flange.
3. Adjust arm to the desired horizontal position and secure by tightening the 1/2" mounting hardware.

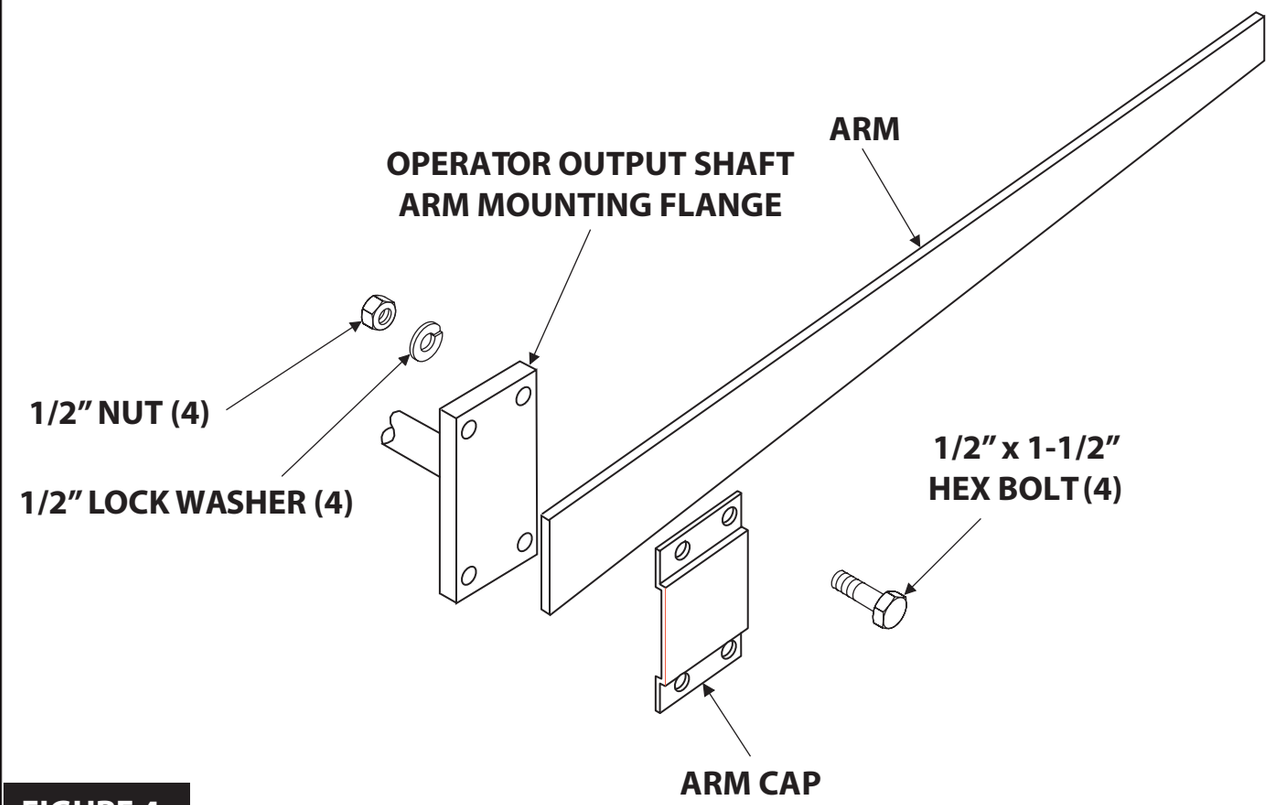

FIGURE 4

FOR 14' AND 16' DOOR

1. Install weight carrier bracket using four (4) 1/2 x 1-1/2" long hex bolts, lock washers and nuts as shown below. Do not tighten until told to do so.
2. Insert large end of wood arm into weight carrier bracket until it hits Stop.
3. Adjust the arm to the desired horizontal position and secure by tightening the 1/2" mounting hardware.
4. Mount counter weight on weight carrier bracket using two (2) 1/2" x 4" long hex bolts, lock washers and nuts. Be sure to use holes in weight carrier bracket as shown in **Figure 5** for proper arm balance.

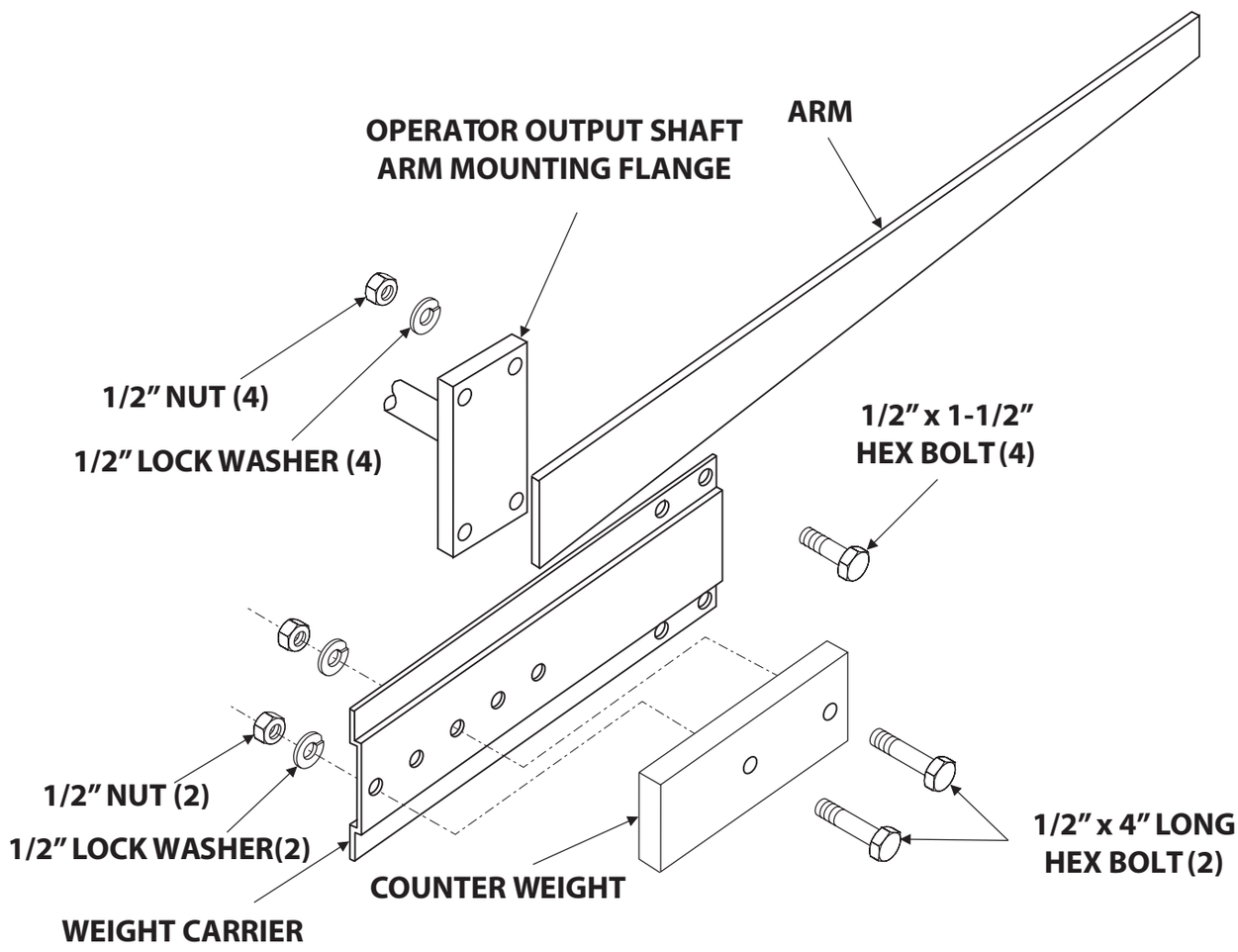

NOTE: USE MOUNTING HOLES SHOWN ABOVE TO MOUNT COUNTER OF WEIGHT FOR PROPER BALANCE OF 14 FOOT OR 16 FOOT ARMS.

FIGURE 5

ELECTRICAL CONNECTIONS

WARNING	DO NOT APPLY POWER UNTIL TOLD TO DO SO! RISK OF ELECTRICAL SHOCK OR INJURY MAY RESULT!

NOTE: Before connecting the operator, use a voltmeter to determine that the electrical service is 115V. THIS OPERATOR CANNOT BE CONNECTED AT 230 VOLTS. Damage will result which is not covered under warranty.

NOTE: Wiring to operator must use watertight materials in accordance with local electric code. See the following wire gauge/distance charts for proper sizing. Master/Slave installations should have SEPARATE power supply wiring or length of wire runs should be figured at half that shown on the chart. **This unit must be grounded in accordance with N.E.C. and local codes.**

LINE VOLTAGE	HP	WIRE GAUGE				
		14 AWG	12 AWG	10 AWG	8 AWG	6 AWG
115VAC	1/2	150'	250'	400'	500'	650'

LOW VOLTAGE WIRE GAUGE/ DISTANCE CHART
24 AWG: UP TO 150'
20 AWG: 150' - 200'
18 AWG: 250' - 1,500'
Control wiring should be run as twisted pairs. DO NOT run control wires in the same conduit as power wires, telephone wires, or loop detector leads.

1. Be sure the power switches at source, and at the operator are ***OFF***.
2. Connect incoming power lines and ground wire as shown below.

Hot leg (Black) to Black; Neutral (white) to White; Ground to Green

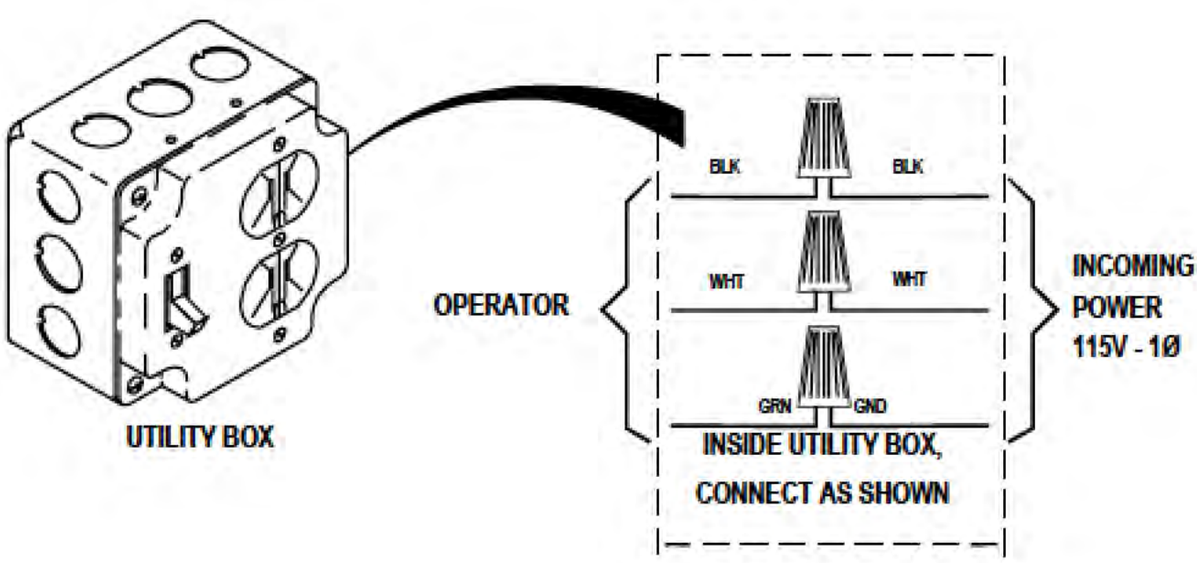

MANUAL OPERATION

1. Remove top cover and side door.
2. Use manual crank on reducer pulley to open gate.

WARNING

TO AVOID INJURY, TURN OFF POWER SUPPLY SWITCH TO OPERATOR BEFORE MAKING ANY ADJUSTMENTS.

LIMIT ADJUSTMENT PROCEDURE

WARNING **TURN OFF POWER SUPPLY BEFORE MAKING ANY ADJUSTMENTS**

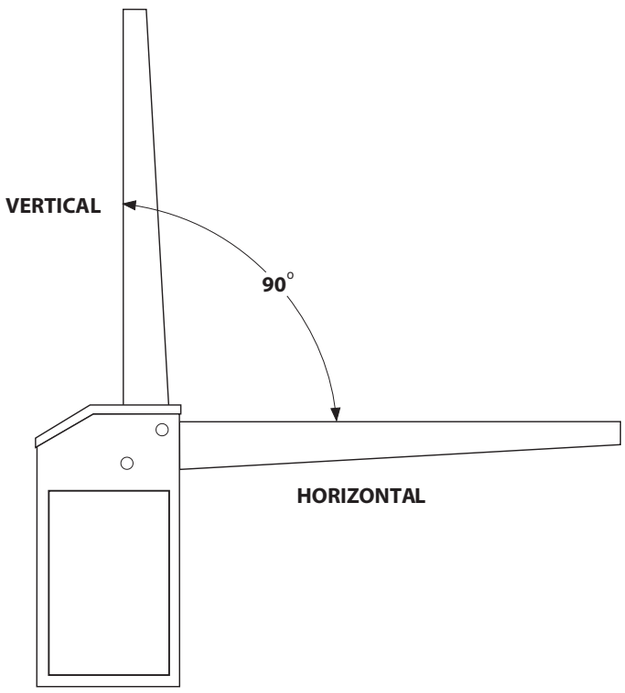

NOTE: The drive linkage geometry prevents more than a 90 degree gate arm movement (Horizontal to Vertical position).

1. In order to achieve 90 degree arm movement from the drive linkage, the limit cams must be set to obtain the linkage positions shown in **Figure 6** below.

FIGURE 6

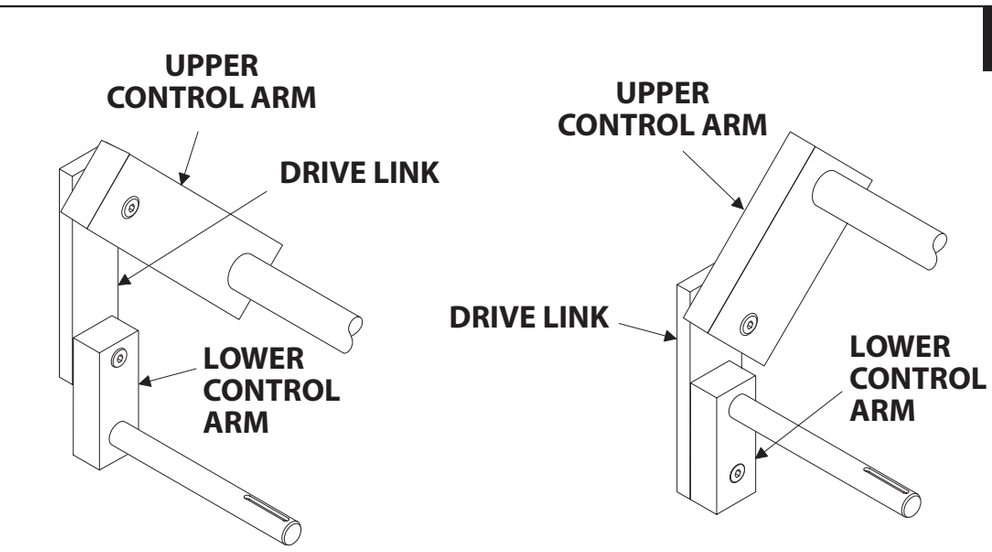

DRIVE LINKAGE IN HORIZONTAL ARM POSITION (DRIVE LINK AND LOWER CONTROL ARM STRAIGHT IN LINE)

DRIVE LINKAGE IN VERTICAL ARM POSITION (DRIVE LINK AND LOWER CONTROL ARM FOLDED TOGETHER IN LINE)

2. To set limit cam, loosen set screw and rotate to desired position then tighten set screw.

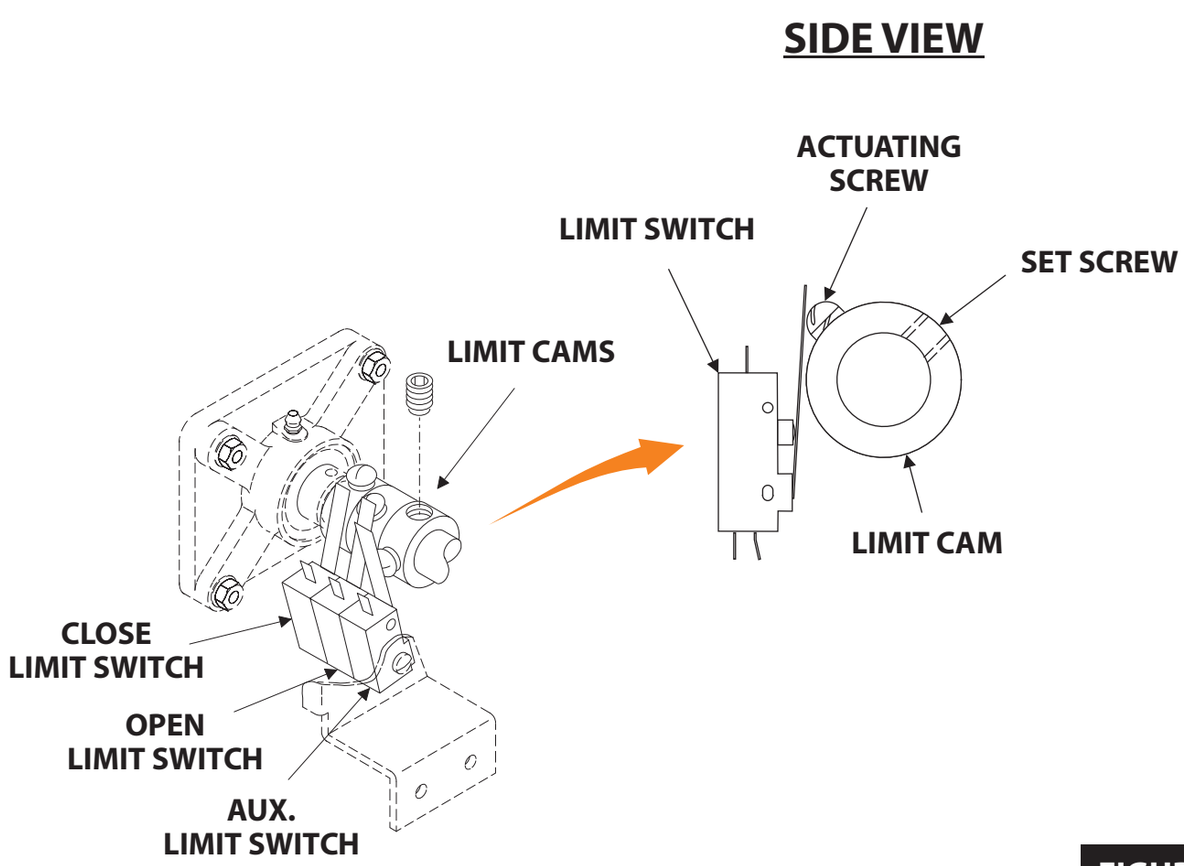

FIGURE 7

Note: Limits are set for 90 degree arm movement at factory.

3. If a shorter stroke than 90 degrees is desired at either end, limits may be reset to achieve this.

4. If the limit cams are adjusted correctly and the operator is maintaining 90 degree rotation but the arm is not horizontal in the down position; loosen the (4) mounting bolts, adjust arm and retighten mounting bolts.

INSTALLATION OF EDGE SENSOR OR PHOTO EYES

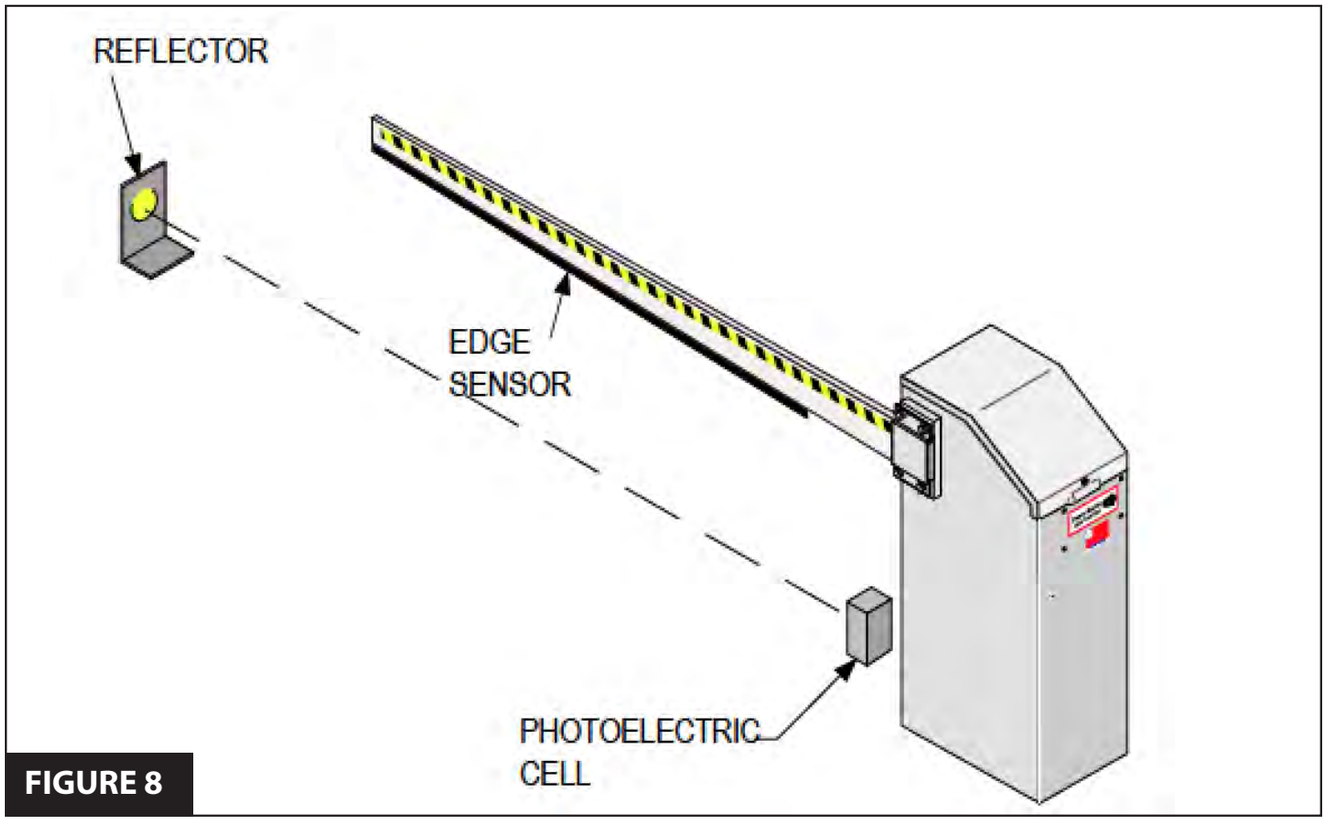

FIGURE 8

NOTE: 24 VAC power is available for devices such as photo eyes, wireless edges, etc. All safety device contacts must be NORMALLY OPEN.

1. Install edge sensor or photoelectric eye system as shown in Figure 8. Photocells should be installed at least 10" above the ground.

   NOTE: All hard wiring to safety edge must be installed so there is no threat of mechanical damage to wiring between components, when the gate is moving.

   NOTE: A separate pedestrian gate must be installed if there is no other entry access but the vehicular gate.

AUXILIARY LIMIT SWITCH

There is an Auxiliary Limit Switch available which provides a normally open and normally closed set of contacts for use with additional equipment. Adjustment is accomplished by rotating the Auxiliary Limit Cam to the desired position and securing that location with the set screw in the cam.

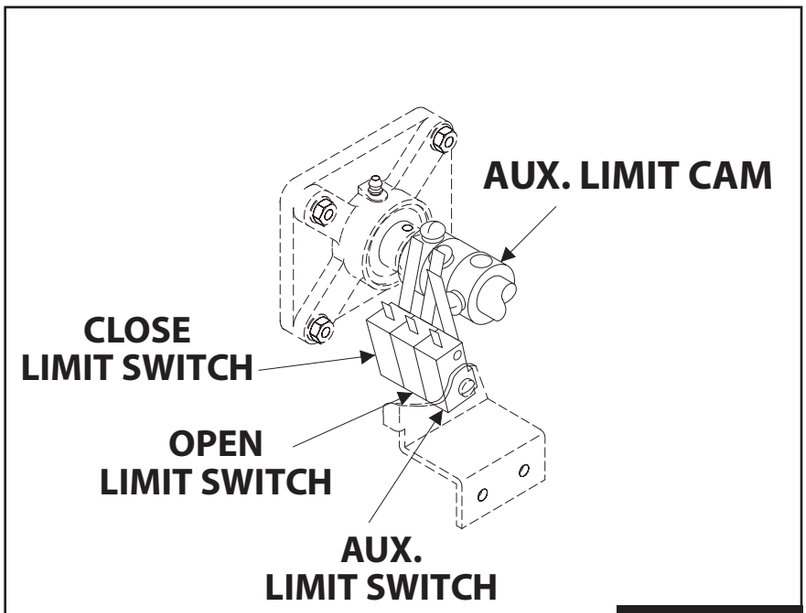

FIGURE 9

LOOP DETECTOR SYSTEMS AND INSTALLATION

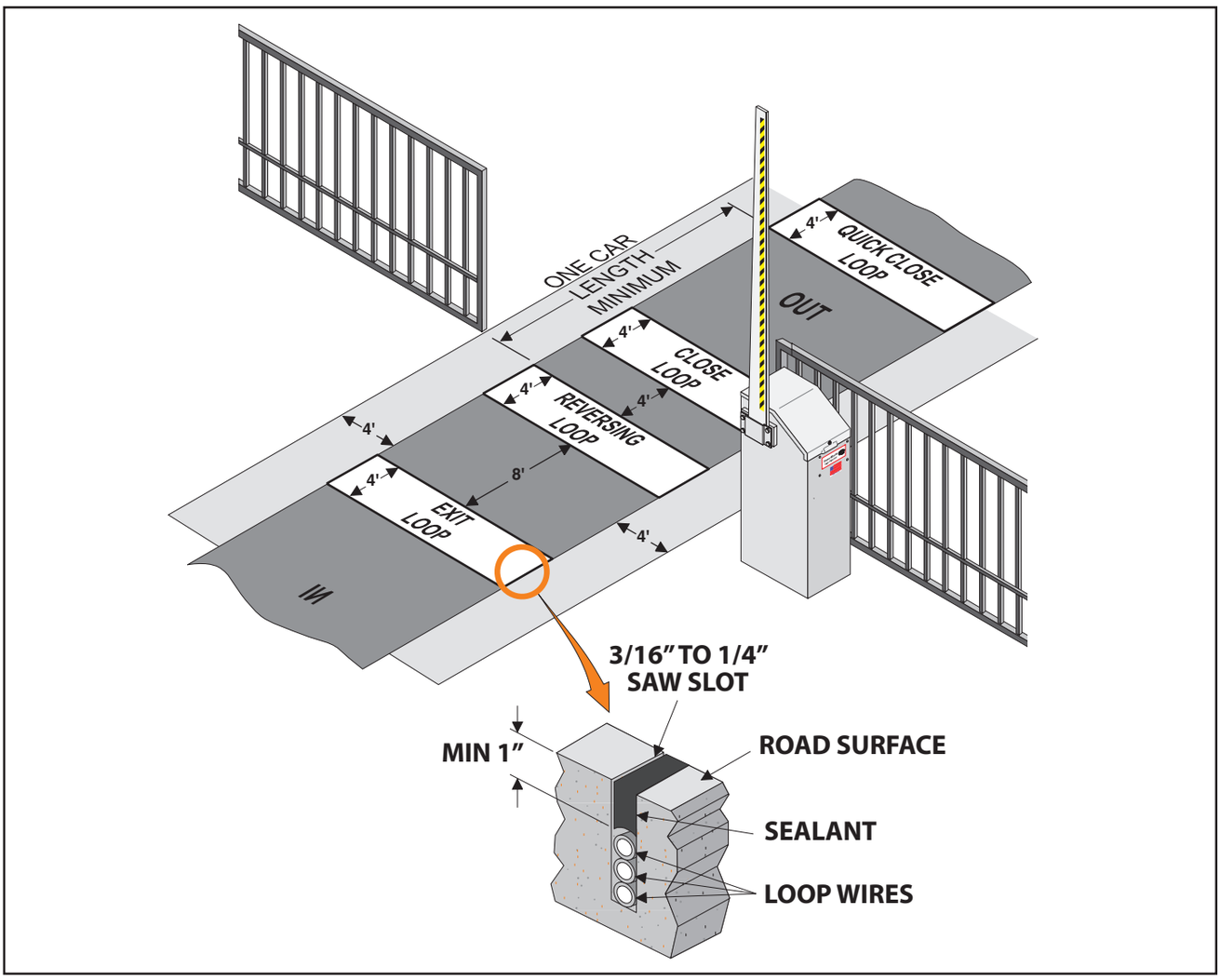

1. The **Exit Loop** provides a signal to open the gate when a vehicle enters the loop zone.

2. The **Reversing Loop** protects a vehicle in the loop zone from being contacted by the gate by overriding any close signal while the gate is open, and by reversing the gate if closing UNLESS the Quick Close Anti Tailgate loop has been installed.

3. The **Quick Close Loop** (Anti Tailgate feature) is usually used for one-way traffic. Once activated, it will disable any CLOSE SAFETY devices and can only be overridden by an ***OPEN*** input. Therefore, this option should ONLY be used in secure applications and a CLOSE WARNING device should be connected.

LOOP INSTALLATION

1. Lay out the desired loop locations per the diagram. The standard size chart on the following page will give an approximate length of wire required for various loop dimensions and number of turns required.

   NOTE: Length of lead-in wires must be added to loop lengths for total length of wire required.

   CAUTION: The loop wires and lead-in wires must be a continuous piece of wire without splices. Only use wire intended for this type of application (Type XHHW insulation 16AWG).

   NOTE: Buried steel from drains or other systems may affect functioning of the loop system. Check with the factory for advice on any special installations. Call 1-800-243-4476.

STANDARD LOOP LAYOUTS
FOR APPROX. 36" HEIGHT DETECTION

LOOP SIZE	# OF TURNS	LOOP WIRE LENGTH
4' X 4'	4	64'
4' X 6'	4	80'
4' X 8'	3	72'
4' X 10'	3	84'
4' X 12'	3	96'
4' X 14'	3	108'
4' X 16'	3	120'
4' X 18'	3	132'
4' X 20'	3	144'
4' X 22'	3	156'
4' X 24'	3	168'
4' X 26'	3	180'
4' X 28'	3	192'
4' X 30'	2	136'
4' X 32'	2	144'
4' X 34'	2	152'
4' X 36'	2	160'
4' X 38'	2	168'
4' X 40'	2	176'

2. Cut the required groove at the locations laid out in **Step#1** according to the diagram below **(Figure 10)**.

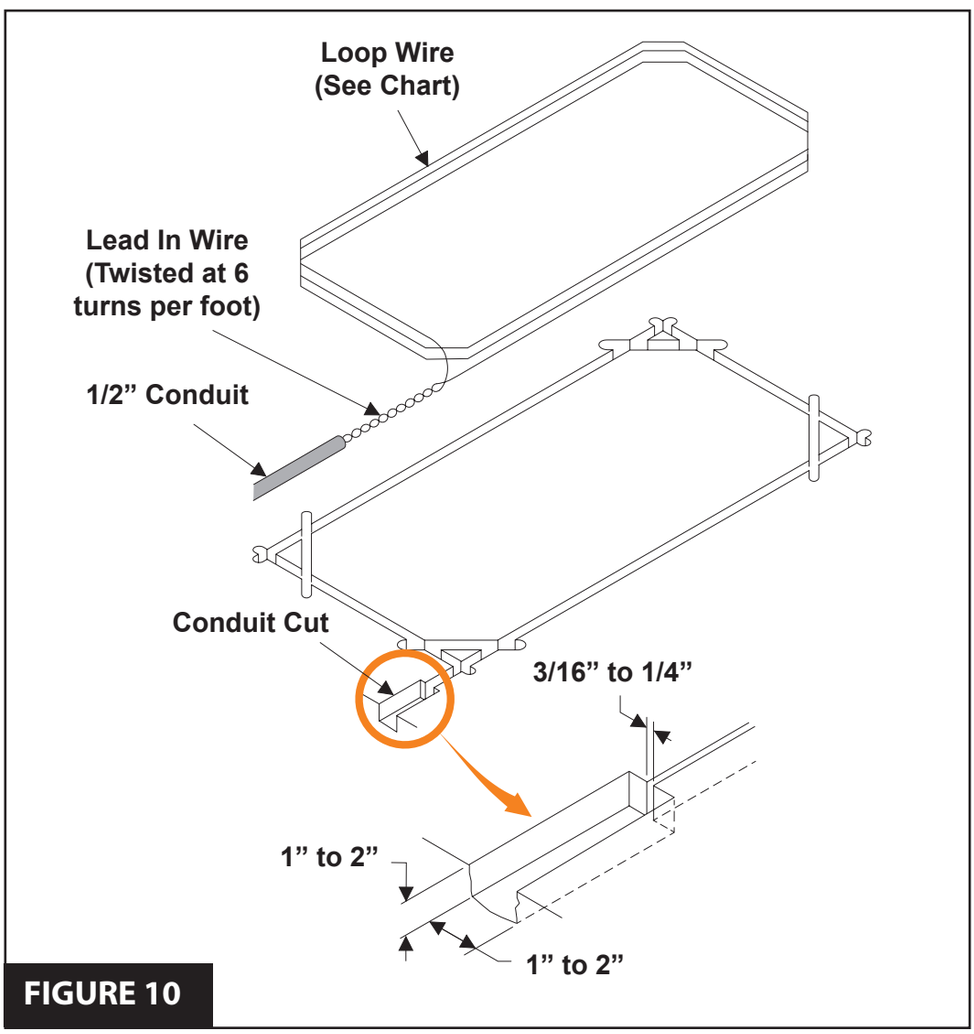

FIGURE 10

3. Leaving enough wire for the lead-in, insert the specified number of turns of wire in the cut grooves (See chart).

   CAUTION: Be careful not to damage the wire insulation during installation.

4. After completing the required number of loop turns, twist the ends together at the rate of 6 turns per foot to form the lead-in.

5. Seal the lead-in wire in the conduit to prevent moisture seepage into the conduit.

6. Fill over the loop wires in the groove with a recommended loop sealant. Contact your distributor for available sealants.

Notes

SUPPLEMENTARY INSTRUCTION MANUAL

for units equipped with

PowerMaster Nitro Board

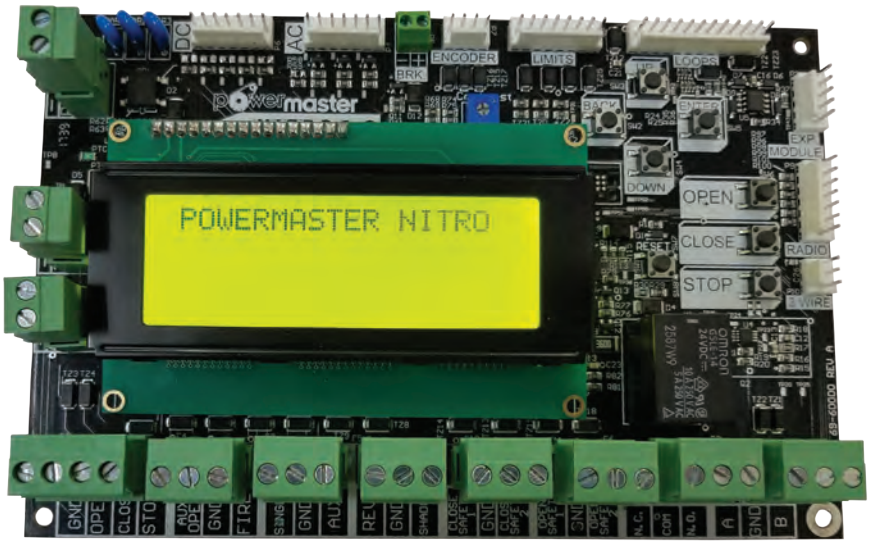

powermaster

NITRO QUICK SETUP

1 ENSURE GATE MOVES SMOOTHLY IN BOTH DIRECTIONS.

2 MECHANICALLY INSTALL GATE OPERATOR
NOTE: SEE MANUAL.

3 BEFORE MAKING ELECTRICAL CONNECTIONS MAKE SURE POWER IS TURNED OFF AT SOURCE

4 CONNECT INCOMING POWER

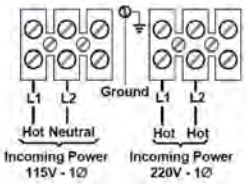

5 SET LIMIT NUTS TO CENTER OF TRAVEL

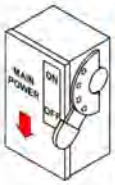

⚠WARNING
TO PREVENT RISK OF PERSONAL INJURY OR DEATH: DISCONNECT POWER AT THE FUSE BOX BEFORE PROCEEDING. ELECTRICAL CONNECTIONS MUST BE MADE BY A QUALIFIED INDIVIDUAL. OBSERVE LOCAL ELECTRICAL CODES WHEN WIRING THE OPERATOR.

6 MANUALLY SET GATE TO CENTER OF TRAVEL

7 THE UNIT CAN NOW BE POWERED

8 PRESS THE ENTER BUTTON

```
****SETUP WIZARD****
PRESS ENTER
```

9 SELECT OPERATOR USING THE UP, DOWN, ENTER BUTTONS

```
**OPERATOR SELECT***
> SLIDE GATE
  SWING GATE
  BARRIER GATE
```

10 DETERMINE THE HAND OF OPERATOR AND SELECT AS SHOWN BELOW

```
*******HANDING********
> RIGHT HAND *
  LEFT HAND
```

SELECTION

STORED SETTING

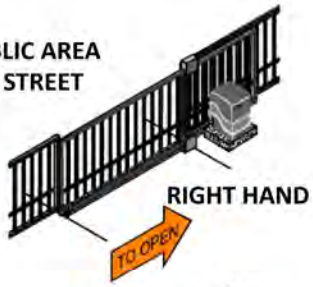

11 SET AUTOCLOSE TIME THEN PRESS ENTER

```
**AUTO CLOSE TIME***
CURRENT: 0MIN 00 SEC

NEW    : 0MIN 00 SEC
```

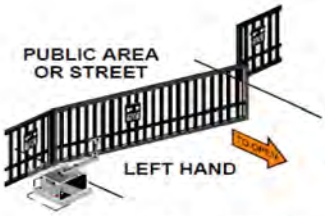

12 CONNECT CONTROLS AND SAFETY DEVICES

24VAC /VDC

UP, DOWN, ENTER, BACK LCD CONTROL BUTTONS

ON BOARD 3-BUTTON CONTROL STATION

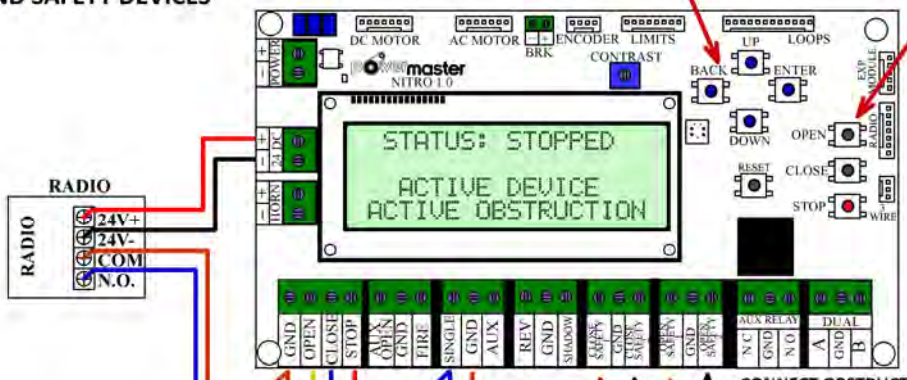

CONNECT OBSTRUCTION DETECTION DEVICE(S)

- REQUIRED: OPEN SAFETY 1- PULSE OR 10K
- REQUIRED: CLOSE SAFETY 1- PULSE OR 10K
- OPTIONAL: OPEN SAFETY 2 - PULSE OR 10K
- OPTIONAL: CLOSE SAFETY 2- PULSE OR 10K

REFER TO MANUAL FOR MORE DETAILS

TOLL FREE TECHNICAL SUPPORT
1-800-243-4476
EMAIL: pmtech@powermasterny.com
WWW.POWERMASTERNY.COM

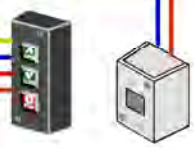

⚠WARNING
TO AVOID RISK OF INJURY MAKE SURE POWER IS TURNED OFF BEFORE MAKING ANY CONNECTIONS.

REV 2019-0416

WARNING

TO PREVENT RISK OF PERSONAL INJURY OR DEATH: DISCONNECT POWER AT THE FUSE BOX BEFORE PROCEEDING. ELECTRICAL CONNECTIONS MUST BE MADE BY A QUALIFIED INDIVIDUAL. OBSERVE LOCAL ELECTRICAL CODES WHEN WIRING THE OPERATOR.

WARNING: These operators have been designed and constructed for use with voltages from 115 to 460 VAC. Check the operator nameplate label on the control box cover for the proper voltage and phase. The application of an improper input voltage or phase will result in catastrophic failure to the internal electrical components.

When hard wiring, observe state and local electrical codes. A wiring diagram is attached to the inside of the control box cover. Connect the appropriate voltage and phase power leads to the appropriate terminals and connect a ground wire to the grounding screw.

The wiring diagram attached inside the cover of the control box details all of the field wiring terminal connections for the operator. Always connect the wires to the push-button control and auxiliary devices exactly as shown.

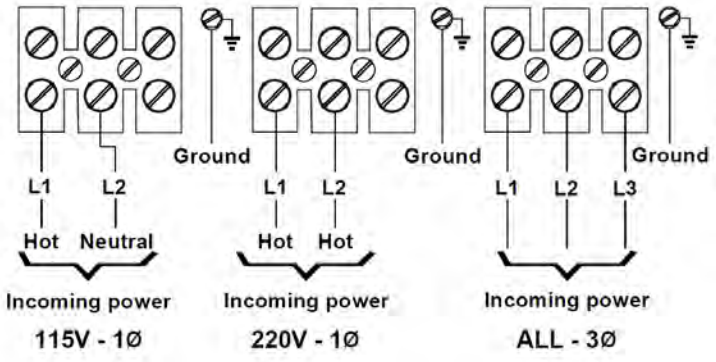

WARNING:
Control voltage of the door operator is 5 volts DC, Class 2. Do not run the power leads and control circuit wiring in the same electrical conduit.

WARNING

TO PREVENT THE RISK OF PERSONAL INJURY AND / OR DAMAGE TO DOOR OR PROPERTY, ONLY OPERATE DOOR CONTROL WHEN DOOR IS IN CLEAR VIEW. IF CONTROL STATION CANNOT BE LOCATED WHERE THE DOOR IS VISIBLE OR IF ANY OTHER DEVICE IS USED TO CONTROL THE DOOR AN AUXILIARY ENTRAPMENT DEVICE SUCH AS A DOOR EDGE OR PHOTOELECTRIC MUST BE CONNECTED.

Note: These Operators are able to accept monitored safety devices for entrapment protection. To comply with code requirements, at least one monitored safety device **MUST** be installed and wired to the operator. Additional safety devices may be necessary, depending on installation requirements.

Number 22-gauge wire or heavier must be used for wiring the control stations and auxiliary control devices to the operator. Smaller gauge wire may cause operational problems.

WARNING

TO AVOID POSSIBLE DAMAGE TO THE DOOR AND OPERATOR ENSURE ALL DOOR LOCKS ARE DISABLED. SETUP THE LOCKBAR SENSING ON THE CONTROL BOARD, OR USE AN INTERLOCK SWITCH IF A LOCK IS REQUIRED TO RETAIN FUNCTIONALITY.

1 Board Interface

LCD Navigation

The board is equipped with **UP**, **DOWN**, **BACK**, and **ENTER** buttons located to the upper right corner of the board.

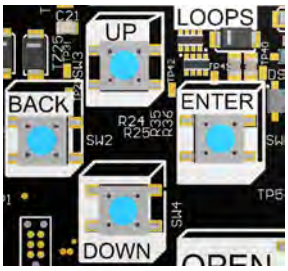

On Board 3-Button Controls

The board is equipped with **OPEN**, **CLOSE**, and **STOP** buttons located to the right side of the board.

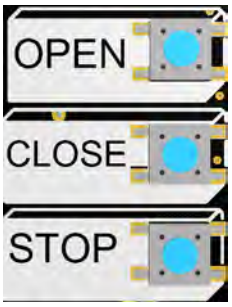

LCD Display

The board is equipped with a 20 x 4 LCD display to provide user feedback and change settings.

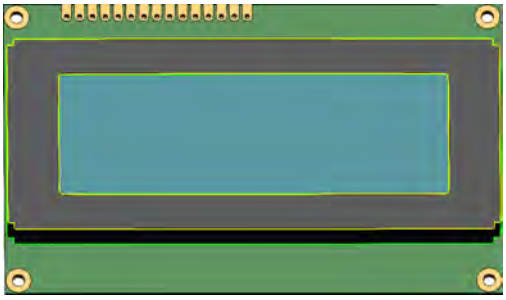

Contrast Adjustment

The board is equipped with a potentiometer in order to adjust the contrast of the LCD screen.

2 Headers

Encoder

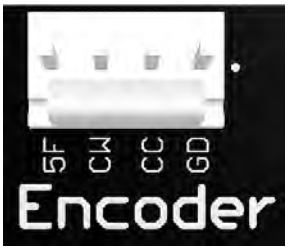

Limits

Expansion Headers

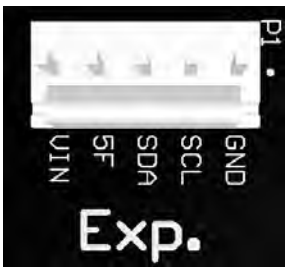

3 Wire Header

DC Motor Header

AC Motor Header

Expansion Module Header

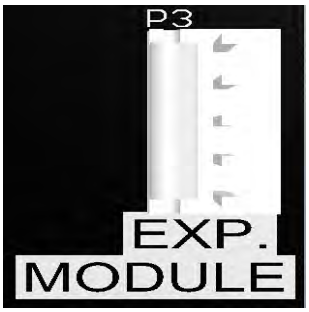

Radio Header

3 Terminals

Horn Terminal

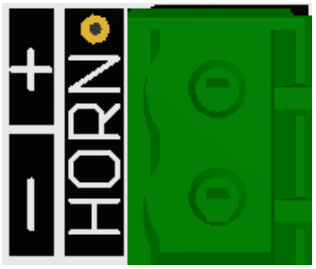

Brake Terminal

Power Terminal

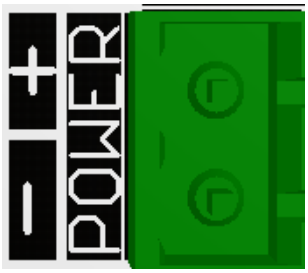

24 VDC

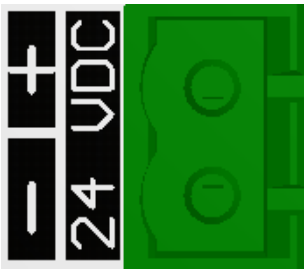

Terminal Strip

4 Setup Wizard

Setup Introduction

1. To begin setting up the operator press the **ENTER** button.

```
****SETUP WIZARD****

PRESS ENTER
```

Operator Type

1. To select the correct operator type press the **UP** and **DOWN** buttons.

2. Once the desired operator type is selected press the **ENTER** button.

```
**OPERATOR SELECT***
> SLIDE GATE
  SWING GATE
  BARRIER GATE
```

Operator Select

1. To select the correct operator press the **UP** and **DOWN** buttons.

2. Once the desired operator is selected press the **ENTER** button.

```
*****SLIDE GATE*****
> AC MOTOR
  DC MOTOR
  VARIABLE SPEED
```

```
*****SWING GATE*****
> AC MOTOR
  DC MOTOR
  VARIABLE SPEED
```

NOTE: The model of the operator can be found on the cover or side of the machine.

Handedness

1. To select the correct hand press the **UP** and **DOWN** buttons.

2. Once the desired hand is selected press the **ENTER** button.

```
******HANDING******
> RIGHT HAND
  LEFT HAND
```

NOTE: The hand of the operator is the side of the driveway the operator is on from the inside looking out.

Open Force Setup

1. Hold the **OPEN** button and run the operator from the **FULLY CLOSED** position all the way to the **OPEN LIMIT**.

2. Once the operator is at the **FULLY OPEN** position press the **ENTER** button.

```
****OPEN CURRENT****

     HOLD OPEN
  UNTIL FULLY OPEN
```

NOTE: The open current setting adjusts the maximum current allowed to operate the door/gate in the open direction.

If the open current load exceeds this threshold, the operator will trigger a safety.

Close Force Setup

1. By holding the **CLOSE** button run the operator from the **FULLY OPEN** position all the way to the **CLOSE LIMIT**.

2. Once the operator is at the **FULLY CLOSED** position press the **ENTER** button.

```
****CLOSE CURRENT***

     HOLD CLOSE
 UNTIL FULLY CLOSED
```

NOTE: The close current setting adjusts the maximum current allowed to operate the door/gate in the close direction.

If the close current load exceeds this threshold, the operator will trigger a safety.

Auto Close Time Adjustment

1. By pressing the **UP** and **DOWN** buttons set the adjusted time for the auto close timer.

2. Once the desired time is set press the **ENTER** button.

```
**AUTO CLOSE TIME**
CURRENT: 0MIN 00 SEC

NEW    : 0MIN 00 SEC
```

NOTE: 0 MIN 00 SEC is OFF. The Auto Close Time specifies the time it will take until a gate or door automatically closes after it has been opened.

---

5 Status

```
STATUS: STOPPED
```

```
STATUS: OPENING
```

```
STATUS: CLOSING
```

```
STATUS: REVERSING
```

```
STATUS: FULLY OPENED
```

```
STATUS: FULLY CLOSED
```

```
STATUS: LOCKOUT
```

6 Menu Overview

```
******MAIN MENU*****
> BASIC
  ADVANCED
  ABOUT
```

```
*****BASIC 1/3******
> HANDING
  DUAL GATE
  AUTO CLOSE TIME
```

```
*****BASIC 2/3******
> PRE MOVE ALARM
  OPEN CURRENT
  CLOSE CURRENT
```

```
*****BASIC 3/3******
> STOP CONTACT
```

```
****ADVANCED 1/2****
> SAFETY ENABLE
  AUX RELAY
  SOFT START
```

```
****ADVANCED 2/2****
> SOFT STOP
  POWER LOSS
```

```
*****ABOUT 1/2******
> CYCLE COUNT
  REVISION
  LANGUAGE
```

```
*****ABOUT 2/2******
> SETUP WIZARD
  EVENT LOG
  INCOMING VOLTAGE
```

7 Basic Programming

```
******MAIN MENU*****
> BASIC
  ADVANCED
  ABOUT
```

Handing

1. When the pointer is at **HANDING** press the **ENTER** button.

```
*****BASIC 1/3******
> HANDING
  DUAL GATE
  AUTO CLOSE TIME
```

2. To select the correct hand press the **UP** and **DOWN** buttons.

3. Once the desired hand is selected press the **ENTER** button.

```
******HANDING*******
> RIGHT HAND *
  LEFT HAND
```

NOTE: The hand of the operator is the side of the driveway the operator is on from the inside looking out.

Dual Gate

1. When the pointer is at **DUAL GATE** press the **ENTER** button.

```
*****BASIC 1/3******
  HANDING
> DUAL GATE
  AUTO CLOSE TIME
```

2. Once the desired gate is selected press the **ENTER** button.

```
*****DUAL GATE******
> SINGLE GATE *
  DUAL GATE
```

NOTE: The single gate setting is for standalone gates. The dual gate setting is for gates that run simultaneously.

Auto Close Time

1. When the pointer is at **AUTO CLOSE TIME** press the **ENTER** button.

```
*****BASIC 1/3******
  HANDING
  DUAL GATE
> AUTO CLOSE TIME
```

2. By pressing the **UP** and **DOWN** buttons set the adjusted time for the auto close timer.

```
**AUTO CLOSE TIME***
CURRENT: 0MIN 00 SEC

NEW    : 0MIN 00 SEC
```

3. Once the desired time is set press the **ENTER** button.

NOTE: 0 MIN 00 SEC is OFF. The auto close time specifies the time it will take until a gate or door automatically closes after it has triggered the open limit.

Pre Move Alarm

1. When the pointer is at **PRE MOVE ALARM** press the **ENTER** button.

```
*****BASIC 2/3******
> PRE MOVE ALARM
  OPEN CURRENT
  CLOSE CURRENT
```

2. By pressing the **UP** and **DOWN** buttons set the adjusted time for the pre move alarm.

```
***PRE MOVE ALARM***
CURRENT: 0 SEC

NEW    : 0 SEC
```

3. Once the desired time is set press the **ENTER** button.

NOTE: 0 SECONDS is OFF. The pre move alarm allows users to specify the amount of time a door or gate should wait until opening/closing.

Open Current

1. When the pointer is at **OPEN CURRENT** press the **ENTER** button.

```
*****BASIC 2/3******
  PRE MOVE ALARM
> OPEN CURRENT
  CLOSE CURRENT
```

2. By pressing the **UP** and **DOWN** buttons set the maximum current for the open current setting.

```
****OPEN CURRENT****
CURRENT: 5

NEW    : 5
```

3. Once the desired current is set press the **ENTER** button.

NOTE: The open current setting adjusts the maximum current allowed to operate the door/gate in the open direction. If the open current load exceeds this threshold, the operator will trigger a safety.

Close Current

1. When the pointer is at **CLOSE CURRENT** press the **ENTER** button.

```
*****BASIC 2/3******
  PRE MOVE ALARM
  OPEN CURRENT
> CLOSE CURRENT
```

2. By pressing the **UP** and **DOWN** buttons set the maximum current for the close current setting.

```
****CLOSE CURRENT***
CURRENT: 5

NEW    : 5
```

3. Once the desired current is set press the **ENTER** button.

NOTE: The close current setting adjusts the maximum current allowed to operate the door/gate in the close direction. If the close current load exceeds this threshold, the operator will trigger a safety.

Stop Contact

1. When the pointer is at **STOP CONTACT** press the **ENTER** button.

```
*****BASIC 3/3******
> STOP CONTACT
```

2. By pressing the **UP** and **DOWN** buttons set Normally Open or Normally Close.

3. Once the desired contact is set press the **ENTER** button.

```
****STOP CONTACT****
> NORMALLY CLOSED *
  NORMALLY OPEN
```

NOTE: Stop Contact set's whether the STOP contact is Normally Open or Normally Close.

---

8 Advanced Programming

```
******MAIN MENU*****
  BASIC
> ADVANCED
  ABOUT
```

Safety Enable

1. When the pointer is at **SAFETY ENABLE** press the **ENTER** button.

```
****ADVANCED 1/2****
> SAFETY ENABLE
  AUX RELAY
  SOFT START
```

2. Users will be allowed to select between **CLOSE SAFETY** and **OPEN SAFETY**.

```
***SAFETY ENABLE***
> CLOSE SAFETY 2
  OPEN SAFETY 2
```

Close Safety

1. When the pointer is at **CLOSE SAFETY** press the **ENTER** button.

2. By pressing the **UP** and **DOWN** buttons select the desired setting.

3. Once the desired setting is selected press the **ENTER** button.

```
***SAFETY ENABLE***
> CLOSE SAFETY 2
  OPEN SAFETY 2
```

```
****CLOSE SAFETY 2*
> ON
  OFF*
```

NOTE: Close safety will detect an obstruction during closing while the gate is moving. Any close obstruction signal will cause the gate to stop then reverse to the full open position.

Open Safety

1. When the pointer is at **OPEN SAFETY** press the **ENTER** button.

2. By pressing the **UP** and **DOWN** buttons select the desired setting.

3. Once the desired setting is selected press the **ENTER** button.

```
***SAFETY  ENABLE***
  CLOSE SAFETY 2
> OPEN SAFETY 2
```

```
****OPEN SAFETY 2**
> ON
  OFF*
```

NOTE: Open safety will detect an obstruction during opening while the gate is moving. Any open obstruction signal will cause the gate to stop then reverse to the full closed position.

Aux Relay

1. When the pointer is at **AUX RELAY** press the **ENTER** button.

2. By pressing the **UP** and **DOWN** buttons select the desired setting.

3. Once the desired setting is selected press the **ENTER** button.

```
****ADVANCED 1/2****
  SAFETY ENABLE
> AUX RELAY
  SOFT START
```

```
*****AUX RELAY******
> AUX RELAY OFF *
  MAGLOCK
  STROBE
```

●Aux Relay Off: the auxiliary relay will be disabled
●Maglock: the magnetic gate lock will be enabled during pending or actual motion (open/close)
●Strobe: the warning strobe light will be enabled during pending or actual motion (open/close)

Soft Start

1. When the pointer is at **SOFT START** press the **ENTER** button.

2. By pressing the **UP** and **DOWN** buttons select the desired setting.

3. Once the desired setting is selected press the **ENTER** button.

```
****ADVANCED 1/2****
  SAFETY ENABLE
  AUX RELAY
> SOFT START
```

```
*****SOFT START*****
CURRENT: 0

NEW    : 0
```

NOTE: The soft start feature will cause the operator to start the DC motor slowly. This reduces gate malfunctions from wear and tear as well as an overload of current. It is recommended for gates with heavy loads.

Soft Stop

1. When the pointer is at **SOFT STOP** press the **ENTER** button.

```
****ADVANCED 2/2****
> SOFT STOP
  POWER LOSS
```

2. By pressing the **UP** and **DOWN** buttons select the desired setting.

3. Once the desired setting is selected press the **ENTER** button.

```
*****SOFT STOP******
CURRENT: 0

NEW    : 0
```

NOTE: The soft stop feature will cause the operator to stop the DC motor slowly. This reduces gate malfunctions from wear and tear as well as an overload of current. It is recommended for gates with heavy loads.

Stop Contact

1. When the pointer is at **POWER LOSS** press the **ENTER** button.

```
****ADVANCED 2/2****
  SOFT STOP
> POWER LOSS
```

2. By pressing the **UP** and **DOWN** buttons select the desired setting.

3. Once the desired setting is selected press the **ENTER** button.

```
*****POWER LOSS*****
> FAIL SAFE *
  FAIL SECURE
```

NOTE: Select Fail Safe if the intended operation when the batteries are low that the operator will go to the full OPEN position.Select Fail Secure if the intended operation when the batteries are low that the operator will go to the full CLOSE position.

9 About

```
******MAIN MENU*****
  BASIC
  ADVANCED
> ABOUT
```

Cycle Count

```
*****ABOUT 1/2******
> CYCLE COUNT
  REVISION
  LANGUAGE
```

1. When the pointer is at **CYCLE COUNT** press the **ENTER** button.

```
*****CYCLE COUNT****

CYCLE COUNT: 123456
```

2. The cycle count will then be displayed.

NOTE: The cycle count shows the number of cycles the operator has run for. 1 cycle is considered a full open and close motion.

Revision

```
*****ABOUT 1/2******
  CYCLE COUNT
> REVISION
  LANGUAGE
```

1. When the pointer is at **REVISION** press the **ENTER** button.

```
******REVISION******
> V1.01
```

2. The revision number will then be displayed.

Language

1. When the pointer is at **LANGUAGE** press the **ENTER** button.

```
*****ABOUT 1/2******
  CYCLE COUNT
  REVISION
> LANGUAGE
```

2. By pressing the **UP** and **DOWN** buttons select the desired setting.

3. Once the desired setting is selected press the **ENTER** button.

```
******LANGUAGE******
> ENGLISH *
  SPANISH
```

NOTE: This setting allows the user to change the language for the LCD. Currently English and Spanish are supported.

Event Log

1. When the pointer is at **EVENT LOG** press the **ENTER** button.

```
*****ABOUT 2/2******
  SETUP WIZARD
> EVENT LOG
  INCOMING VOLTAGE
```

2. By pressing the **UP** and **DOWN** buttons, you can view the logs.

```
***EVENT LOG 1/5****
1. STOP
2. OPENING
3. OPEN BUTTON
```

NOTE: A log of the 15 most recent activities will be shown. The most recent activity will be number ”1”.

Setup Wizard

1. When the pointer is at **SETUP WIZARD** press the **ENTER** button.

```
*****ABOUT 2/2******
> SETUP WIZARD
  EVENT LOG
  INCOMING VOLTAGE
```

2. By pressing the **ENTER** button, the setup wizard will run.

```
****SETUP WIZARD****

PRESS ENTER
```

Incoming Voltage

1. When the pointer is at **Incoming Voltage** press the **ENTER** button.

```
*****ABOUT 2/2******
  SETUP WIZARD
  EVENT LOG
> INCOMING VOLTAGE
```

2. This will display what voltage is being supplied to the circuit board in real time.

```
**INCOMING VOLTAGE**

VOLTAGE : 31.7 VDC
```

---

10 Lockout

Low Voltage:

Reason: This lockout occurs when the total voltage of the system is below 21.5 volts.
Fix: Restore voltage to above 21.5 volts.
● Make sure that no fuses are blown and that there is adequate AC power.
● This will occur when batteries are fully discharged after AC power loss. Batteries will recharge when AC power is restored.

```
STATUS: LOCKOUT

**VOLTAGE TOO LOW***
```

Two Safeties Tripped:

Reason: This lockout occurs when a total of two safety reversals happen before a limit is triggered. This can be any combination of external safeties or the inherent force limiter.

Fix: Press the **STOP** button on the circuit board.

```
STATUS: LOCKOUT

TWO SAFETIES TRIPPED
```

● Check external safety devices.
● Check that the gate moves freely.
● Re-adjust the force settings on the board.
● Check log for greater details.

Motor Not Detected:

Reason: This lockout occurs when the circuit board does not detect a that a motor is present.

Fix: Press the **STOP** button on the circuit board.

- Check that the motor overload isn't tripped.
- Check the motor wiring is correct and not damaged.
- Check that the motor brushes aren't damaged or worn out.

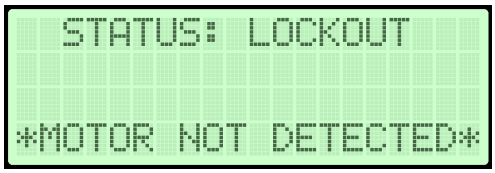

Terminal Characteristics

#	Terminal	Voltage	Description
1	GND	0 VDC	Ground connection
2	OPEN	24-30 VAC	Open command. This is a **NO** connection.
3	CLOSE	24-30 VAC	Close command. This is a **NO** connection.
4	STOP	5 VDC	Stop command. Can be configured **NO** or **NC**
5	AUX OPEN	5 VDC	Auxiliary open command. Serves as open command for devices other than push button. This is a **NO** connection.
7	FIRE	5 VDC	**NO** connection in fire box for fire department access
8	SINGLE	30 VDC	**NO** connection to alternate between open and close with single button operation.
10	AUX	5-30 VDC	Connects to auxiliary devices
11	REV	5 VDC	**NO** connection to device. Causes reversal in direction
13	SHADOW	5 VDC	Keeps the gate open as long as the signal is present. This is a **NO** connection.
14	CLOSE SAFETY 1	5 VDC	**Required** pulse or 10k monitored safety device. This terminal monitors when the gate is **CLOSING**
16	CLOSE SAFETY 2	5-30 VDC	**Optional** pulse or 10k monitored safety device. This terminal monitors when the gate is **CLOSING**
17	OPEN SAFETY 1	5-30 VDC	**Required** pulse or 10k monitored safety device. This terminal monitors when the gate is **OPENING**
19	OPEN SAFETY 2	5-30 VDC	**Optional** pulse or 10k monitored safety device This terminal monitors when the gate is **OPENING**
20	AUX RELAY N.C	0-120 VAC	**NC** connection for auxiliary relay.
21	AUX RELAY COM	0-120 VAC	**COM** connection for auxiliary relay.
22	AUX RELAY N.O	0-120 VAC	**NO** connection for auxiliary relay.
23	DUAL GATE A	5-30 VDC	**Optional** connection A for dual gate operation
24	DUAL GATE GND	5-30 VDC	**Optional** connection GND for dual gate operation.
25	DUAL GATE B	5-30 VDC	**Optional** connection B for dual gate operation.
26	BRK	24 VDC	Connection for an external brake
27	POWER	24-30 VAC/DC	Incoming power connection. Could be supplied off of transformer or DC power supply.
28	24 VDC	24 VDC	24 volts for accessory power connections.
29	HORN	24 VDC	Connection for the exterior horn.

PowerMaster

Limited 5-Year Warranty

PowerMaster warrants all GATE OPERATORS (Swing, Slide, Barrier categories) to be free of defects in materials and workmanship for a period of five (5) years from date of manufacture, provided that product has been registered. A one year warranty applies if product has not been registered.

ELECTRICAL PARTS (including boards, switches, relays, etc):
PowerMaster warrants electrical parts for a two (2) year period, provided that product has been registered. A one year warranty applies if product has not been registered.

If any part is found to be defective during this period, new parts will be furnished free of charge. Failure of this product due to misuse, improper installation, alterations, vandalism, acts of God, or lack of maintenance is ***not*** covered under this warranty, and voids any other implied warranties herein.

PowerMaster is ***not responsible*** for any labor charges incurred in connection with the installation of warranted parts.

In order to activate this warranty, the registration form found with your operator **MUST BE COMPLETED AND RETURNED WITHIN THIRTY CALENDAR DAYS FROM DATE OF PURCHASE.** Visit our website at www.PowerMasterNY.com and click on the ***Register your Product*** link.

You can also register via email to PMtech@PowerMasterNY.com.

If registration is not activated, a **ONE YEAR** warranty from date of manufacture will apply for all claims.

REGISTRATION INFORMATION

Operator Information

Model D-SBG

Serial # _____

Date Installed _____

Location Installed

Address _____

Address _____

Address _____

Installer's Information

Company Name _____

Address _____

Address 2 _____

City, State, Zip _____

Telephone # _____

Contact Name _____

The end user should retain this information for their records and to obtain warranty service.

Need Technical Support?

Visit: www.PowerMasterNY.com/technical-information

Call us toll free @ 1-800-243-4476

Email us: PMtech@PowerMasterNY.com

/PowerMasterOperators

/PowerMaster

/company/PowerMaster

Scan **QR Code** with your Smart phone to **find us** on the web!

www.PowerMasterNY.com

powermaster

MANUFACTURED BY V.E. POWER DOOR CO,INC.

REV 2020-0120